成育科技股份有限公司

AMODE TECH.LTD.

一体成型电感系列目录

ACDMR系列

（2020年）

台北OFFICE：

地址：23544新北市中和區中正路951號9樓

TEL: 886-2-8221-8116

FAX: 886-2-2222-8715

昆山OFFICE：

地址： 昆山經濟技術開發區偉業路18號現代廣場A座718室

TEL: 86-512-86160089 Cell phone: 86-13451773809/13451776298

FAX: 86-512-86160087

http://www.amode.com.tw

Catalog of Products

Model	P/N	Size (mm)	Inductance (uH)	Page
	ACDMR160806EB	160806	1.0-1.5uH	4
	ACDMR201610MQ(主推)	201610	0.33-2.2uH	5
	ACDMR201610TX(主推)	201610	4.7-10uH	6
	ACDMR201610AT	201610	0.24-4.7uH	7
	ACDMR201610SG	201610	0.33-2.2uH	8
	ACDMR201610PG	201610	0.24-2.2uH	9
	ACDMR252010MQ(主推)	252010	0.33-3.3uH	10
	ACDMR252010TX(主推)	252010	4.7-10uH	11
	ACDMR252010AT	252010	0.47-4.7uH	12
	ACDMR252010SG	252010	0.33-2.2uH	13
	ACDMR252010PG	252010	0.24-4.7uH	14
	ACDMR252012TX	252012	0.47-10uH	15
	ACDMR252012AT	252012	0.47-4.7uH	16
	ACDMR252012SG	252012	0.47-2.2uH	17
	ACDMR252012PG	252012	0.47-4.7uH	18
	ACDMR322512TG	322512	0.47-6.8uH	19
	ACDMR0308Q(主推)	3008	6.8-10uH	20
	ACDMR0310Q(主推)	3010	1.0-10uH	21
	ACDMR0312T	3012	0.15-10uH	22
	ACDMR0315T	3015	0.22-10uH	23
	ACDMR0320T	3020	0.1-10uH	24
	ACDMR0408Q(主推)	4008	6.8-10uH	25
	ACDMR0410Q(主推)	4010	4.7-10uH	26
	ACDMR0410LZ	4010	10uH	27
	ACDMR0412Q	4012	0.47-10uH	28
	ACDMR0412T(主推)	4012	0.1-10uH	29
	ACDMR0412M	4012	0.15-4.7uH	30
	ACDMR0412CST	4012	0.1-10uH	31
	ACDMR0418Q(主推)	4018	0.47-10uH	32
	ACDMR0420M	4020	0.1-22uH	33
	ACDMR0420T	4020	0.1-22uH	34
	ACDMR0512T(主推)	5012	0.1-15uH	35

Catalog of Products

Model	P/N	Size (mm)	Inductance (uH)	Page
	ACDMR0512CST	5012	0.1-8.2uH	36
	ACDMR0515T	5015	0.12-22uH	37
	ACDMR0518M(主推)	5018	0.47-10uH	38
	ACDMR0518T	5018	0.33-15uH	39
	ACDMR0520T	5020	0.22-15uH	40
	ACDMR0530M	5030	0.1-10uH	41
	ACDMR0530AM(主推)	5030	0.82-10uH	42
	ACDMR0530T	5030	0.15-22uH	43
	ACDMR0530AST	5030	0.47-4.7uH	44
	ACDMR0610Q(主推)	6010	2.2-10uH	45
	ACDMR0612Q(主推)	6012	2.2-10uH	46
	ACDMR0612AZ	6012	4.7uH	47
	ACDMR0712T	7012	0.1-10uH	48
	ACDMR0712AM(主推)	7012	10uH	49
	ACDMR0712AT	7012	10uH	50
	ACDMR0715T	7015	0.22-22uH	51
	ACDMR0718M(主推)	7018	0.1-10uH	52
	ACDMR0718T	7018	0.22-33uH	53
	ACDMR0720T	7020	0.1-22uH	54
	ACDMR0724M(主推)	7024	0.22-22uH	56
	ACDMR0724T	7024	0.22-10uH	57
	ACDMR0730M(主推)	7030	0.1-33uH	58
	ACDMR0730CM	7030	0.1-6.8uH	59
	ACDMR0730T	7030	0.1-22uH	60
	ACDMR0730PW(不主推)	7030	6.8-10uH	61
	ACDMR0740T	7040	0.12-47uH	62
	ACDMR0750T	7050	0.22-22uH	64
	ACDMR1040M(主推)	1040	0.15-100uH	66
	ACDMR1040T	1040	0.15-33uH	67
	ACDMR1050T	1050	0.3-68uH	68
	ACDMR1335T	1335	0.1-10uH	69
	ACDMR1350M	1350	0.22-47uH	70

Catalog of Products

Model	P/N	Size (mm)	Inductance (uH)	Page
	ACDMR1350T(主推)	1350	0.2-22uH	71
	ACDMR1360T(主推)	1360	0.47-220uH	72
	ACDMR1360W	1360	4.7-8.2uH	74
	ACDMR1360YW	1360	8.2-10uH	75
	ACDMR1365T(主推)	1365	0.15-47uH	76
	ACDMR1365TW(主推)	1365	10uH	78
	ACDMR1365W(主推)	1365	4.7-68uH	79
	ACDMR1770M	1770	1.0-100uH	80
	ACDMR1770T(主推)	1770	0.45-100uH	81
	ACDMR1770AT	1770	47uH	82
	ACDMR1770W(主推)	1770	4.7-100uH	83
	ACDMR1770TW(主推)	1770	10uH	84

ACDMR160806EB SERIES

MECHANICAL DIMENSION :

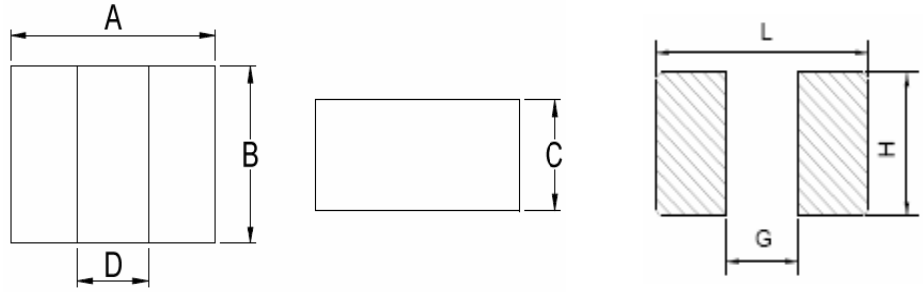

Series	A(mm)	B(mm)	C(mm)	D(mm)	L(mm)	G(mm)	H(mm)
ACDMR160806EB	1.6±0.3	0.8±0.3	0.6 Max	0.65 Typ	1.7 Ref	0.55 Ref	0.9 Ref

ELECTRICAL CHARACTERISTICS:

Parts Number	Inductance (uH)	Test Freq. (Hz)	Isat(A) ※1		Irms(A) ※2		DCR (mΩ)	
			Max	Typ	Max	Typ	Max	Typ
ACDMR160806EB-1R0MT	1.0±20%	1M/1V	1.35	1.5	0.9	1.0	318	283
ACDMR160806EB-1R5MT	1.5±20%	1M/1V	0.9	1.0	0.7	0.8	480	420

REMARK :

※1: Saturation Rated Current:DC current(A)that will cause Lo to drop approximately 30%

※2: Temperature Rise Current:DC current(A)that will cause an approximate △T of 40℃

※3: All test data is referenced to 25℃ ambient.Operating Temperature Range -55℃ to +125℃.

※4: The part temperature(ambient+temp rise)should not exceed 125℃ under worst case operating conditions. Circuit design,component placement,PWB trace size and thickness,airflow and other cooling provisions all affect the part temperature should be verified in the end application

ACDMR201610MQ SERIES

MECHANICAL DIMENSION :

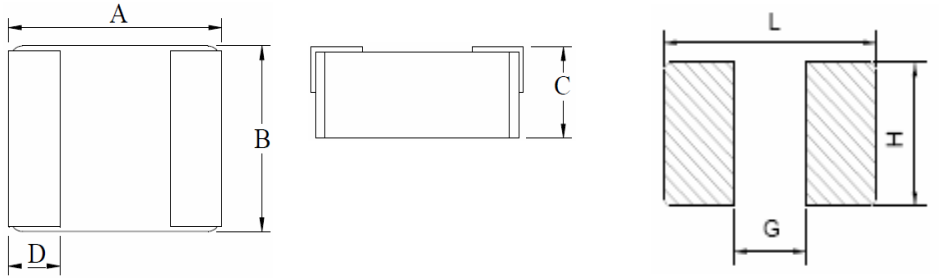

Series	A(mm)	B(mm)	C(mm)	D(mm)	L(mm)	G(mm)	H(mm)
ACDMR201610MQ	2.0±0.2	1.6±0.2	1.0 Max	0.5±0.2	2.0 Ref	0.7 Ref	1.6 Ref

ELECTRICAL CHARACTERISTICS:

RoHS

Parts Number	Inductance (uH)	Test Freq. (Hz)	Isat(A) ※1		Irms(A) ※2		DCR (mΩ)	
			Max	Typ	Max	Typ	Max	Typ
ACDMR201610MQ-R33MT	0.33±20%	1M/1V	5.2	5.7	4.4	4.8	26	21
ACDMR201610MQ-R47MT	0.47±20%	1M/1V	4.5	4.9	4.05	4.4	32	26
ACDMR201610MQ-R68MT	0.68±20%	1M/1V	4.0	4.6	3.1	3.4	50	40
ACDMR201610MQ-1R0MT	1.0±20%	1M/1V	3.65	3.9	3.0	3.2	59	49
ACDMR201610MQ-1R5MT	1.5±20%	1M/1V	2.7	3.0	2.05	2.35	109	99
ACDMR201610MQ-2R2MT	2.2±20%	1M/1V	2.45	2.65	2.0	2.2	150	142

REMARK :

※1: Saturation Rated Current:DC current(A)that will cause Lo to drop approximately 30%

※2: Temperature Rise Current:DC current(A)that will cause an approximate △T of 40℃

※3: All test data is referenced to 25℃ ambient.Operating Temperature Range -55℃ to +125℃.

※4: The part temperature(ambient+temp rise)should not exceed 125℃ under worst case operating conditions. Circuit design,component placement,PWB trace size and thickness,airflow and other cooling provisions all affect the part temperature should be verified in the end application

ACDMR201610TX SERIES

MECHANICAL DIMENSION :

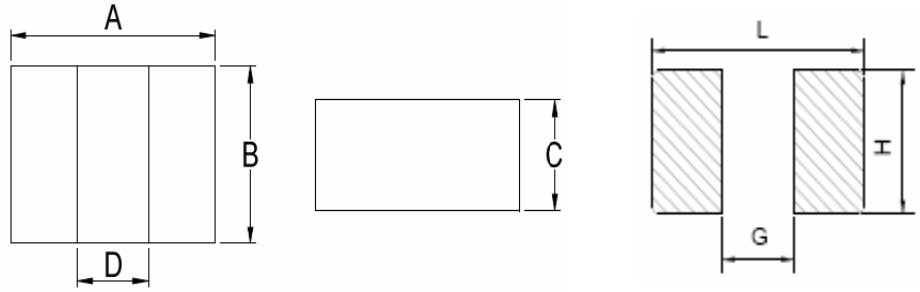

Series	A(mm)	B(mm)	C(mm)	D(mm)	L(mm)	G(mm)	H(mm)
ACDMR201610TX	2.0±0.2	1.6±0.2	1.0 Max	0.6 Ref	2.0 Ref	0.5 Ref	1.6 Ref

ELECTRICAL CHARACTERISTICS: **RoHS**

Parts Number	Inductance (uH)	Test Freq. (Hz)	Isat(A) ※1		Irms(A) ※2		DCR (mΩ)	
			Max	Typ	Max	Typ	Max	Typ
ACDMR201610TX-4R7MT	4.7±20%	1M/1V	1.7	1.9	1.3	1.4	250	210
ACDMR201610TX-6R8MT	6.8±20%	1M/1V	1.1	1.2	1.1	1.2	490	410
ACDMR201610TX-100MT	10±20%	1M/1V	0.8	0.9	0.6	0.7	700	580

REMARK :

※1: Saturation Rated Current:DC current(A)that will cause Lo to drop approximately 30%

※2: Temperature Rise Current:DC current(A)that will cause an approximate △T of 40℃

※3: All test data is referenced to 25℃ ambient.Operating Temperature Range -55℃ to +125℃.

※4: The part temperature(ambient+temp rise)should not exceed 125℃ under worst case operating conditions. Circuit design,component placement,PWB trace size and thickness,airflow and other cooling provisions all affect the part temperature should be verified in the end application

ACDMR201610AT SERIES

MECHANICAL DIMENSION :

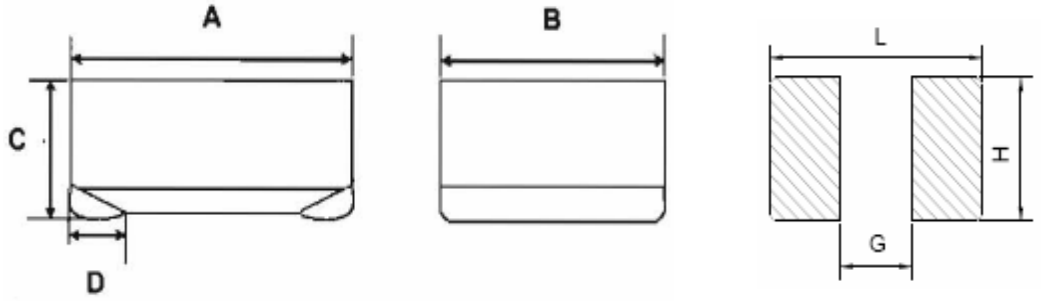

Series	A(mm)	B(mm)	C(mm)	D(mm)	L(mm)	G(mm)	H(mm)
ACDMR201610AT	2.0±0.2	1.6±0.2	1.0 Max	0.5±0.3	2.2 Ref	0.8 Ref	1.8 Ref

ELECTRICAL CHARACTERISTICS: **RoHS**

Parts Number	Inductance (uH)	Test Freq. (Hz)	Isat(A) ※1		Irms(A) ※2		DCR (mΩ)	
			Max	Typ	Max	Typ	Max	Typ
ACDMR201610AT-R24MT	0.24±20%	1M/1V	4.20	4.70	3.00	3.30	48	40
ACDMR201610AT-R47MT	0.47±20%	1M/1V	2.70	3.60	2.80	3.00	53	44
ACDMR201610AT-R68MT	0.68±20%	1M/1V	2.35	2.60	2.35	2.90	73	61
ACDMR201610AT-1R0MT	1.0±20%	1M/1V	2.20	2.50	2.20	2.50	84	70
ACDMR201610AT-1R5MT	1.5±20%	1M/1V	1.60	1.90	1.65	1.90	138	115
ACDMR201610AT-2R2MT	2.2±20%	1M/1V	1.50	1.80	1.50	1.60	186	155
ACDMR201610AT-3R3MT	3.3±20%	1M/1V	1.15	1.40	1.20	1.45	276	230
ACDMR201610AT-4R7MT	4.7±20%	1M/1V	1.00	1.20	0.95	1.15	396	330

REMARK :

※1: Saturation Rated Current:DC current(A)that will cause Lo to drop approximately 30%

※2: Temperature Rise Current:DC current(A)that will cause an approximate △T of 40℃

※3: All test data is referenced to 25℃ ambient.Operating Temperature Range -40℃ to +105℃.

※4: The part temperature(ambient+temp rise)should not exceed 105℃ under worst case operating conditions. Circuit design,component placement,PWB trace size and thickness,airflow and other cooling provisions all affect the part temperature should be verified in the end application

ACDMR201610SG SERIES

MECHANICAL DIMENSION :

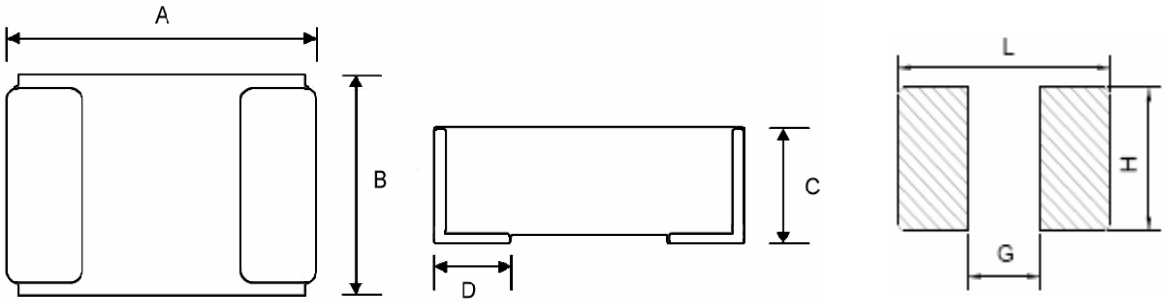

Series	A(mm)	B(mm)	C(mm)	D(mm)	L(mm)	G(mm)	H(mm)
ACDMR201610SG	2.0±0.3	1.6±0.3	1.0 Max	0.5±0.3	2.0 Ref	0.9 Ref	1.6 Ref

ELECTRICAL CHARACTERISTICS: **RoHS**

Parts Number	Inductance (uH)	Test Freq. (Hz)	Isat(A) ※1		Irms(A) ※2		DCR (mΩ)	
			Max	Typ	Max	Typ	Max	Typ
ACDMR201610SG-R33MT	0.33±20%	1M/1V	6.1	6.7	4.0	4.7	26	21
ACDMR201610SG-R47MT	0.47±20%	1M/1V	5.3	6.1	4.05	4.5	30	23
ACDMR201610SG-1R0MT	1.0±20%	1M/1V	3.3	3.9	3.0	3.2	60	48
ACDMR201610SG-1R5MT	1.5±20%	1M/1V	3.1	3.4	2.2	2.4	99	86
ACDMR201610SG-2R2MT	2.2±20%	1M/1V	2.45	2.6	2.0	2.2	140	117

REMARK :

※1: Saturation Rated Current:DC current(A)that will cause Lo to drop approximately 40%

※2: Temperature Rise Current:DC current(A)that will cause an approximate △T of 40℃

※3: All test data is referenced to 25℃ ambient.Operating Temperature Range -40℃ to +125℃.

※4: The part temperature(ambient+temp rise)should not exceed 125℃ under worst case operating conditions. Circuit design,component placement,PWB trace size and thickness,airflow and other cooling provisions all affect the part temperature should be verified in the end application

ACDMR201610PG SERIES

MECHANICAL DIMENSION :

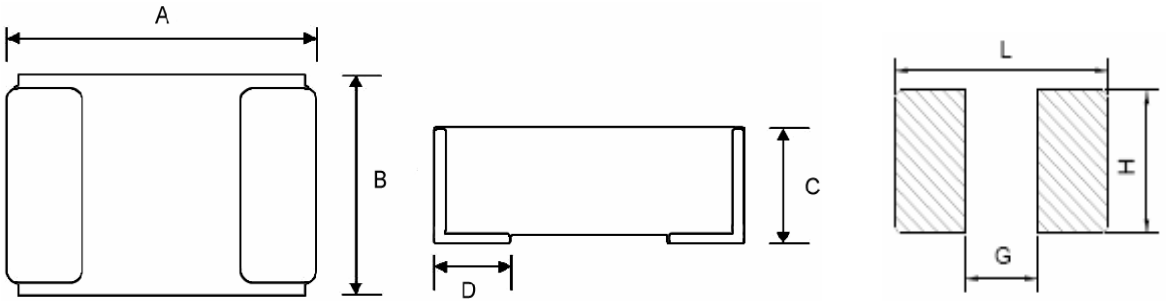

Series	A(mm)	B(mm)	C(mm)	D(mm)	L(mm)	G(mm)	H(mm)
ACDMR201610PG	2.0±0.3	1.6±0.3	1.0 Max	0.5±0.3	2.0 Ref	0.9 Ref	1.6 Ref

ELECTRICAL CHARACTERISTICS:

RoHS

Parts Number	Inductance (uH)	Test Freq. (Hz)	Isat(A) ※1		Irms(A) ※2		DCR (mΩ)	
			Max	Typ	Max	Typ	Max	Typ
ACDMR201610PG-R24MT	0.24±20%	1M/1V	5.05	5.6	4.5	5.0	21	17
ACDMR201610PG-R33MT	0.33±20%	1M/1V	4.5	5.0	3.69	4.1	29	24
ACDMR201610PG-R47MT	0.47±20%	1M/1V	4.0	4.4	3.15	3.5	40	33
ACDMR201610PG-R68MT	0.68±20%	1M/1V	3.33	3.7	3.06	3.4	49	41
ACDMR201610PG-1R0MT	1.0±20%	1M/1V	2.61	2.9	2.26	2.6	69	60
ACDMR201610PG-1R5MT	1.5±20%	1M/1V	2.25	2.5	1.81	2.0	129	114
ACDMR201610PG-2R2MT	2.2±20%	1M/1V	1.71	1.9	1.5	1.7	150	135

REMARK :

※1: Saturation Rated Current:DC current(A)that will cause Lo to drop approximately 40%

※2: Temperature Rise Current:DC current(A)that will cause an approximate △T of 40℃

※3: All test data is referenced to 25℃ ambient.Operating Temperature Range -40℃ to +125℃.

※4: The part temperature(ambient+temp rise)should not exceed 125℃ under worst case operating conditions. Circuit design,component placement,PWB trace size and thickness,airflow and other cooling provisions all affect the part temperature should be verified in the end application

ACDMR252010MQ SERIES

MECHANICAL DIMENSION :

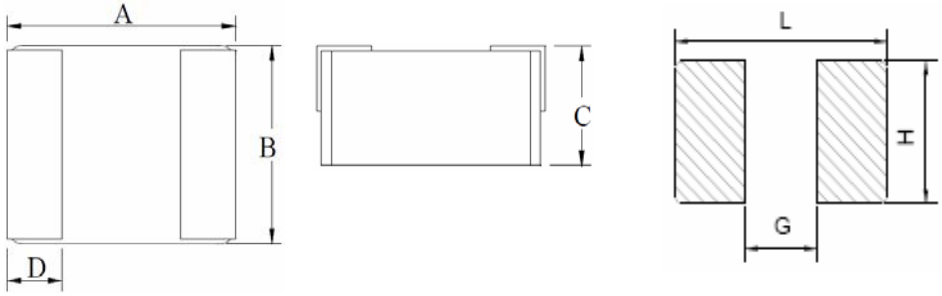

Series	A(mm)	B(mm)	C(mm)	D(mm)	L(mm)	G(mm)	H(mm)
ACDMR252010MQ	2.5±0.3	2.0±0.3	1.0 Max	0.6±0.2	2.8 Ref	1.2 Ref	2.0 Ref

ELECTRICAL CHARACTERISTICS:

RoHS

Parts Number	Inductance (uH)	Test Freq. (Hz)	Isat(A) ※1		Irms(A) ※2		DCR (mΩ)	
			Max	Typ	Max	Typ	Max	Typ
ACDMR252010MQ-R33MT	0.33±20%	1M/1V	7.0	7.3	5.0	5.5	20	16
ACDMR252010MQ-R47MT	0.47±20%	1M/1V	5.0	5.6	3.7	4.3	25	19
ACDMR252010MQ-1R0MT	1.0±20%	1M/1V	4.3	5.0	3.4	3.7	53	44
ACDMR252010MQ-1R5MT	1.5±20%	1M/1V	3.5	3.8	2.4	2.6	79	65
ACDMR252010MQ-2R2MT	2.2±20%	1M/1V	3.0	3.4	2.2	2.4	102	89
ACDMR252010MQ-3R3MT	3.3±20%	1M/1V	1.8	2.0	1.4	1.6	180	150

REMARK :

※1: Saturation Rated Current:DC current(A)that will cause Lo to drop approximately 30%

※2: Temperature Rise Current:DC current(A)that will cause an approximate △T of 40℃

※3: All test data is referenced to 25℃ ambient.Operating Temperature Range -55℃ to +125℃.

※4: The part temperature(ambient+temp rise)should not exceed 125℃ under worst case operating conditions. Circuit design,component placement,PWB trace size and thickness,airflow and other cooling provisions all affect the part temperature should be verified in the end application

ACDMR252010TX SERIES

MECHANICAL DIMENSION :

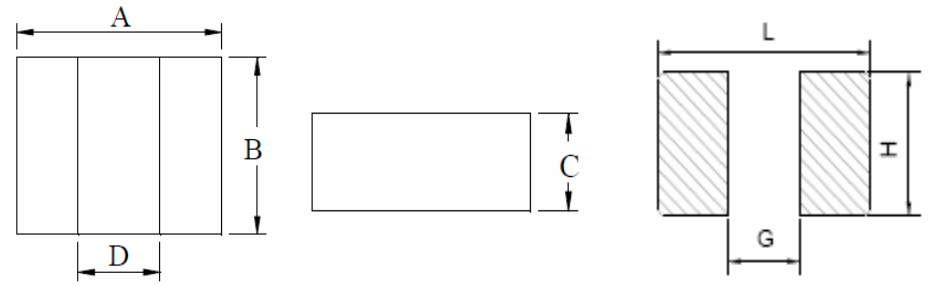

Series	A(mm)	B(mm)	C(mm)	D(mm)	L(mm)	G(mm)	H(mm)
ACDMR252010TX	2.5±0.3	2.0±0.3	1.0 Max	0.7 Typ	2.6 Ref	0.6 Ref	2.1 Ref

ELECTRICAL CHARACTERISTICS:

RoHS

Parts Number	Inductance (uH)	Test Freq. (Hz)	Isat(A) ※1		Irms(A) ※2		DCR (mΩ)	
			Max	Typ	Max	Typ	Max	Typ
ACDMR252010TX-4R7MT	4.7±20%	1M/1V	1.95	2.15	1.35	1.5	270	225
ACDMR252010TX-6R8MT	6.8±20%	1M/1V	1.4	1.6	1.2	1.3	456	380
ACDMR252010TX-100MT	10±20%	1M/1V	1.3	1.4	0.95	1.05	575	500

REMARK :

※1: Saturation Rated Current:DC current(A)that will cause Lo to drop approximately 30%

※2: Temperature Rise Current:DC current(A)that will cause an approximate △T of 40℃

※3: All test data is referenced to 25℃ ambient.Operating Temperature Range -55℃ to +125℃.

※4: The part temperature(ambient+temp rise)should not exceed 125℃ under worst case operating conditions. Circuit design,component placement,PWB trace size and thickness,airflow and other cooling provisions all affect the part temperature should be verified in the end application

ACDMR252010AT SERIES

MECHANICAL DIMENSION :

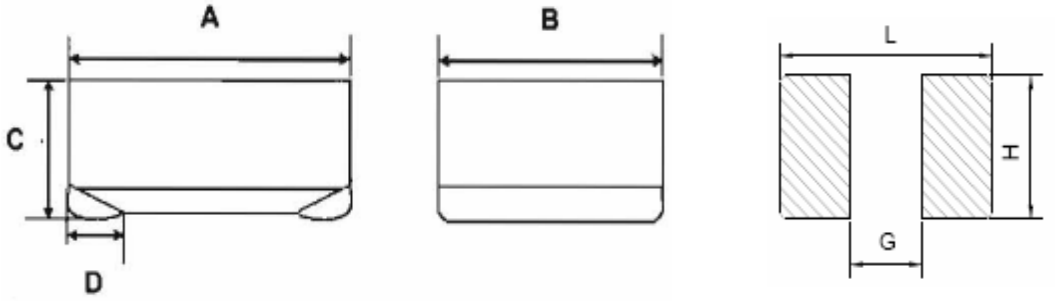

Series	A(mm)	B(mm)	C(mm)	D(mm)	L(mm)	G(mm)	H(mm)
ACDMR252010AT	2.5±0.3	2.0±0.3	1.0 Max	0.5±0.3	2.8 Ref	1.2 Ref	2.0 Ref

ELECTRICAL CHARACTERISTICS: **RoHS**

Parts Number	Inductance (uH)	Test Freq. (Hz)	Isat(A) ※1		Irms(A) ※2		DCR (mΩ)	
			Max	Typ	Max	Typ	Max	Typ
ACDMR252010AT-R47MT	0.47±20%	1M/1V	4.0	4.5	3.2	3.6	48	40
ACDMR252010AT-R68MT	0.68±20%	1M/1V	3.7	4.0	2.9	3.2	70	58
ACDMR252010AT-1R0MT	1.0±20%	1M/1V	2.7	3.0	2.5	2.7	79	66
ACDMR252010AT-2R2MT	2.2±20%	1M/1V	1.9	2.1	1.5	1.8	168	140
ACDMR252010AT-4R7MT	4.7±20%	1M/1V	1.3	1.5	1.1	1.3	324	270

REMARK :

※1: Saturation Rated Current:DC current(A)that will cause Lo to drop approximately 30%

※2: Temperature Rise Current:DC current(A)that will cause an approximate △T of 40℃

※3: All test data is referenced to 25℃ ambient.Operating Temperature Range -40℃ to +105℃.

※4: The part temperature(ambient+temp rise)should not exceed 105℃ under worst case operating conditions. Circuit design,component placement,PWB trace size and thickness,airflow and other cooling provisions all affect the part temperature should be verified in the end application

ACDMR252010SG SERIES

MECHANICAL DIMENSION :

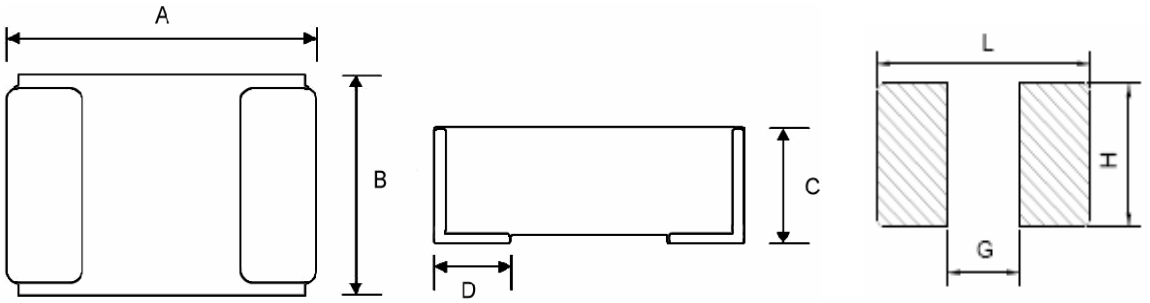

Series	A(mm)	B(mm)	C(mm)	D(mm)	L(mm)	G(mm)	H(mm)
ACDMR252010SG	2.5±0.3	2.0±0.3	1.0 Max	0.6±0.3	2.8 Ref	1.2 Ref	2.0 Ref

ELECTRICAL CHARACTERISTICS:

RoHS

Parts Number	Inductance (uH)	Test Freq. (Hz)	Isat(A) ※1		Irms(A) ※2		DCR (mΩ)	
			Max	Typ	Max	Typ	Max	Typ
ACDMR252010SG-R33MT	0.33±20%	1M/1V	7.0	7.8	4.8	5.6	22	17
ACDMR252010SG-R47MT	0.47±20%	1M/1V	6.0	6.6	4.4	5.2	29	23
ACDMR252010SG-1R0MT	1.0±20%	1M/1V	4.0	4.4	3.1	3.4	52	41
ACDMR252010SG-1R5MT	1.5±20%	1M/1V	3.5	3.8	2.3	2.6	77	67
ACDMR252010SG-2R2MT	2.2±20%	1M/1V	3.0	3.3	2.1	2.4	110	88

REMARK :

※1: Saturation Rated Current:DC current(A)that will cause Lo to drop approximately 40%

※2: Temperature Rise Current:DC current(A)that will cause an approximate △T of 40℃

※3: All test data is referenced to 25℃ ambient.Operating Temperature Range -40℃ to +125℃.

※4: The part temperature(ambient+temp rise)should not exceed 125℃ under worst case operating conditions. Circuit design,component placement,PWB trace size and thickness,airflow and other cooling provisions all affect the part temperature should be verified in the end application

ACDMR252010PG SERIES

MECHANICAL DIMENSION :

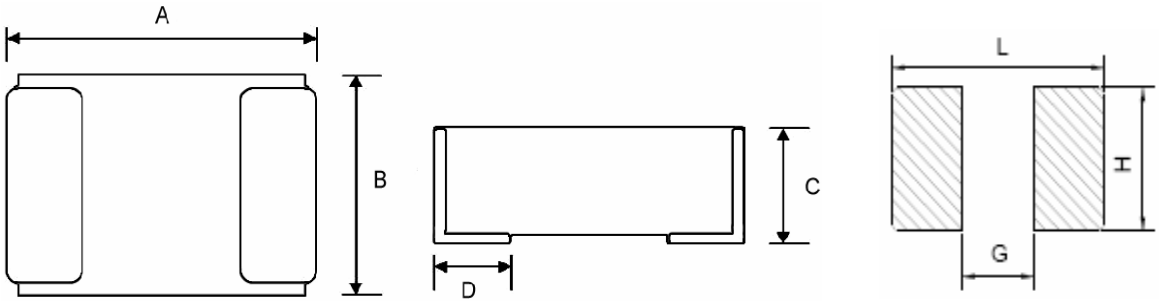

Series	A(mm)	B(mm)	C(mm)	D(mm)	L(mm)	G(mm)	H(mm)
ACDMR252010PG	2.5±0.3	2.0±0.3	1.0 Max	0.6±0.3	2.8 Ref	1.2 Ref	2.0 Ref

ELECTRICAL CHARACTERISTICS:

RoHS

Parts Number	Inductance (uH)	Test Freq. (Hz)	Isat(A) ※1		Irms(A) ※2		DCR (mΩ)	
			Max	Typ	Max	Typ	Max	Typ
ACDMR252010PG-R22MT	0.22±20%	1M/1V	7.2	7.9	5.3	5.9	12.5	9
ACDMR252010PG-R33MT	0.33±20%	1M/1V	6.0	6.6	4.0	4.4	26	21
ACDMR252010PG-R47MT	0.47±20%	1M/1V	4.5	5.0	3.51	3.9	32	27
ACDMR252010PG-R68MT	0.68±20%	1M/1V	3.87	4.3	3.06	3.4	44	37
ACDMR252010PG-1R0MT	1.0±20%	1M/1V	3.15	3.5	2.7	3.0	54	45
ACDMR252010PG-1R5MT	1.5±20%	1M/1V	2.34	2.6	2.25	2.5	91	76
ACDMR252010PG-2R2MT	2.2±20%	1M/1V	2.16	2.4	2.07	2.3	119	99
ACDMR252010PG-4R7MT	4.7±20%	1M/1V	1.62	1.8	1.22	1.36	262	220

REMARK :

※1: Saturation Rated Current:DC current(A)that will cause Lo to drop approximately 40%

※2: Temperature Rise Current:DC current(A)that will cause an approximate △T of 40℃

※3: All test data is referenced to 25℃ ambient.Operating Temperature Range -40℃ to +125℃.

※4: The part temperature(ambient+temp rise)should not exceed 125℃ under worst case operating conditions. Circuit design,component placement,PWB trace size and thickness,airflow and other cooling provisions all affect the part temperature should be verified in the end application

ACDMR252012TX SERIES

MECHANICAL DIMENSION :

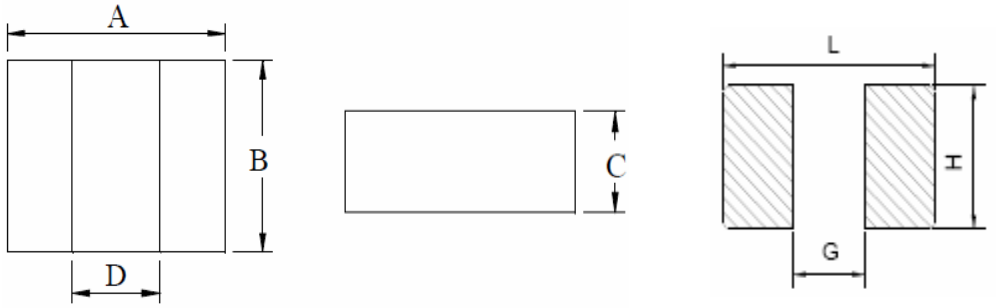

Series	A(mm)	B(mm)	C(mm)	D(mm)	L(mm)	G(mm)	H(mm)
ACDMR252012TX	2.5±0.3	2.0±0.3	1.2 Max	0.7 Typ	2.6 Ref	0.6 Ref	2.1 Ref

ELECTRICAL CHARACTERISTICS: **RoHS**

Parts Number	Inductance (uH)	Test Freq. (Hz)	Isat(A) ※1		Irms(A) ※2		DCR (mΩ)	
			Max	Typ	Max	Typ	Max	Typ
ACDMR252012TX-4R7MT	4.7±20%	1M/1V	2.0	2.3	1.5	1.7	210	180
ACDMR252012TX-6R8MT	6.8±20%	1M/1V	1.6	1.8	1.3	1.4	325	270
ACDMR252012TX-100MT	10±20%	1M/1V	1.4	1.6	1.1	1.2	399	360

REMARK :

※1: Saturation Rated Current:DC current(A)that will cause Lo to drop approximately 30%

※2: Temperature Rise Current:DC current(A)that will cause an approximate △T of 40℃

※3: All test data is referenced to 25℃ ambient.Operating Temperature Range -55℃ to +125℃.

※4: The part temperature(ambient+temp rise)should not exceed 125℃ under worst case operating conditions. Circuit design,component placement,PWB trace size and thickness,airflow and other cooling provisions all affect the part temperature should be verified in the end application

ACDMR252012AT SERIES

MECHANICAL DIMENSION :

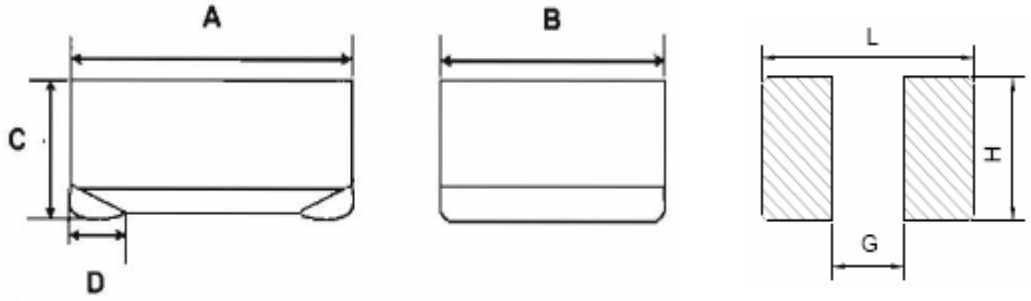

Series	A(mm)	B(mm)	C(mm)	D(mm)	L(mm)	G(mm)	H(mm)
ACDMR252012AT	2.5±0.3	2.0±0.3	1.2 Max	0.5±0.3	2.8 Ref	1.2 Ref	2.0 Ref

ELECTRICAL CHARACTERISTICS: **RoHS**

Parts Number	Inductance (uH)	Test Freq. (Hz)	Isat(A) ※1	Irms(A) ※2	DCR (mΩ)	
			Max	Max	Max	Typ
ACDMR252012AT-R47MT	0.47±20%	1M/1V	4.0	3.5	39	29
ACDMR252012AT-R68MT	0.68±20%	1M/1V	3.1	3.0	56	46
ACDMR252012AT-1R0MT	1.0±20%	1M/1V	2.7	2.7	65	54
ACDMR252012AT-2R2MT	2.2±20%	1M/1V	2.2	2.0	125	104
ACDMR252012AT-3R3MT	3.3±20%	1M/1V	1.7	1.7	167	139
ACDMR252012AT-4R7MT	4.7±20%	1M/1V	1.4	1.4	260	198

REMARK :

※1: Saturation Rated Current:DC current(A)that will cause Lo to drop approximately 30%

※2: Temperature Rise Current:DC current(A)that will cause an approximate △T of 40℃

※3: All test data is referenced to 25℃ ambient.Operating Temperature Range -40℃ to +105℃.

※4: The part temperature(ambient+temp rise)should not exceed 105℃ under worst case operating conditions. Circuit design,component placement,PWB trace size and thickness,airflow and other cooling provisions all affect the part temperature should be verified in the end application

ACDMR252012SG SERIES

MECHANICAL DIMENSION :

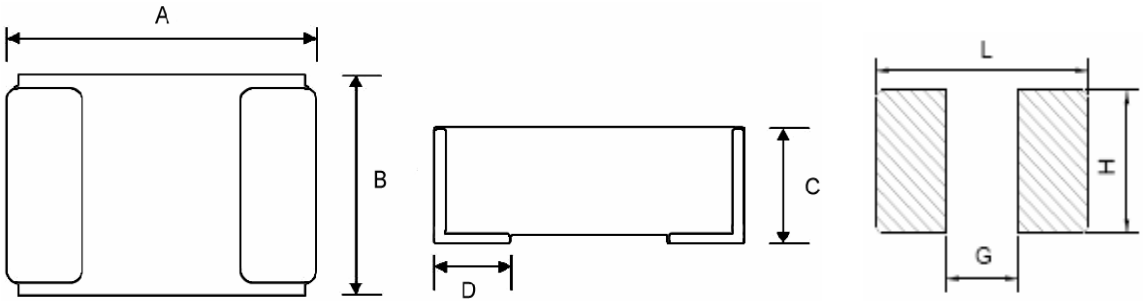

Series	A(mm)	B(mm)	C(mm)	D(mm)	L(mm)	G(mm)	H(mm)
ACDMR252012SG	2.5±0.3	2.0±0.3	1.2 Max	0.6±0.3	2.8 Ref	1.2 Ref	2.0 Ref

ELECTRICAL CHARACTERISTICS:

RoHS

Parts Number	Inductance (uH)	Test Freq. (Hz)	Isat(A) ※1		Irms(A) ※2		DCR (mΩ)	
			Max	Typ	Max	Typ	Max	Typ
ACDMR252012SG-R47MT	0.47±20%	1M/1V	6.2	6.8	4.9	5.8	22	16
ACDMR252012SG-1R0MT	1.0±20%	1M/1V	4.3	4.8	3.3	3.9	44	36
ACDMR252012SG-2R2MT	2.2±20%	1M/1V	3.2	3.5	2.2	2.5	89	74

REMARK :

※1: Saturation Rated Current:DC current(A)that will cause Lo to drop approximately 40%

※2: Temperature Rise Current:DC current(A)that will cause an approximate △T of 40℃

※3: All test data is referenced to 25℃ ambient.Operating Temperature Range -40℃ to +125℃.

※4: The part temperature(ambient+temp rise)should not exceed 125℃ under worst case operating conditions. Circuit design,component placement,PWB trace size and thickness,airflow and other cooling provisions all affect the part temperature should be verified in the end application

ACDMR252012PG SERIES

MECHANICAL DIMENSION :

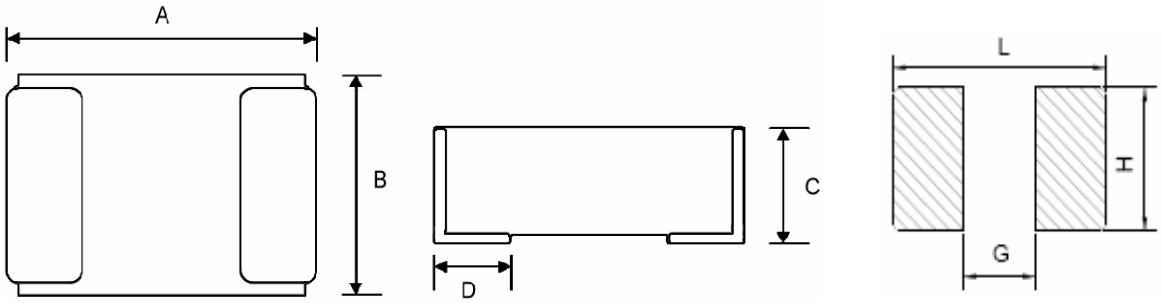

Series	A(mm)	B(mm)	C(mm)	D(mm)	L(mm)	G(mm)	H(mm)
ACDMR252012PG	2.5±0.3	2.0±0.3	1.2 Max	0.6±0.3	2.8 Ref	1.2 Ref	2.0 Ref

ELECTRICAL CHARACTERISTICS:

RoHS

Parts Number	Inductance (uH)	Test Freq. (Hz)	Isat(A) ※1		Irms(A) ※2		DCR (mΩ)	
			Max	Typ	Max	Typ	Max	Typ
ACDMR252012PG-R47MT	0.47±20%	1M/1V	4.95	5.3	4.18	4.6	25	21
ACDMR252012PG-R68MT	0.68±20%	1M/1V	4.63	5.0	3.36	3.7	35	29
ACDMR252012PG-1R0MT	1.0±20%	1M/1V	4.04	4.4	3.18	3.5	49	41
ACDMR252012PG-1R5MT	1.5±20%	1M/1V	2.91	3.2	2.27	2.5	77	64
ACDMR252012PG-2R2MT	2.2±20%	1M/1V	2.73	3.0	2.06	2.27	98	85
ACDMR252012PG-4R7MT	4.7±20%	1M/1V	1.58	1.9	1.4	1.61	235	196

REMARK :

※1: Saturation Rated Current:DC current(A)that will cause Lo to drop approximately 40%

※2: Temperature Rise Current:DC current(A)that will cause an approximate △T of 40℃

※3: All test data is referenced to 25℃ ambient.Operating Temperature Range -40℃ to +125℃.

※4: The part temperature(ambient+temp rise)should not exceed 125℃ under worst case operating conditions. Circuit design,component placement,PWB trace size and thickness,airflow and other cooling provisions all affect the part temperature should be verified in the end application

ACDMR322512TG SERIES

MECHANICAL DIMENSION :

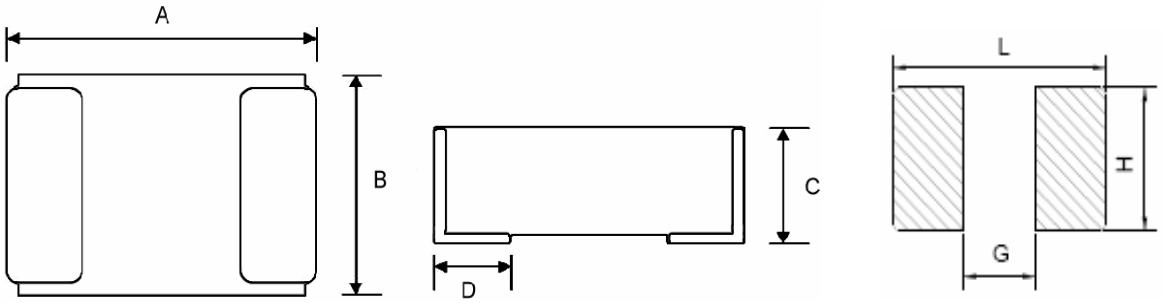

Series	A(mm)	B(mm)	C(mm)	D(mm)	L(mm)	G(mm)	H(mm)
ACDMR322512TG	3.2±0.3	2.5±0.3	1.2 Max	0.6±0.2	3.5 Ref	1.7 Ref	2.5 Ref

ELECTRICAL CHARACTERISTICS:

RoHS

Parts Number	Inductance (uH)	Test Freq. (Hz)	Isat(A) ※1		Irms(A) ※2		DCR (mΩ)	
			Max	Typ	Max	Typ	Max	Typ
ACDMR322512TG-R47MT	0.47±20%	1M/1V	7	7.7	5.2	5.7	22	18
ACDMR322512TG-1R0MT	1.0±20%	1M/1V	4.7	5.4	3.9	4.3	34	28
ACDMR322512TG-6R8MT	6.8±20%	1M/1V	1.5	1.9	1.2	1.5	240	200

REMARK :

※1: Saturation Rated Current:DC current(A)that will cause Lo to drop approximately 40%

※2: Temperature Rise Current:DC current(A)that will cause an approximate △T of 40℃

※3: All test data is referenced to 25℃ ambient.Operating Temperature Range -40℃ to +125℃.

※4: The part temperature(ambient+temp rise)should not exceed 125℃ under worst case operating conditions. Circuit design,component placement,PWB trace size and thickness,airflow and other cooling provisions all affect the part temperature should be verified in the end application

ACDMR0308Q SERIES

MECHANICAL DIMENSION :

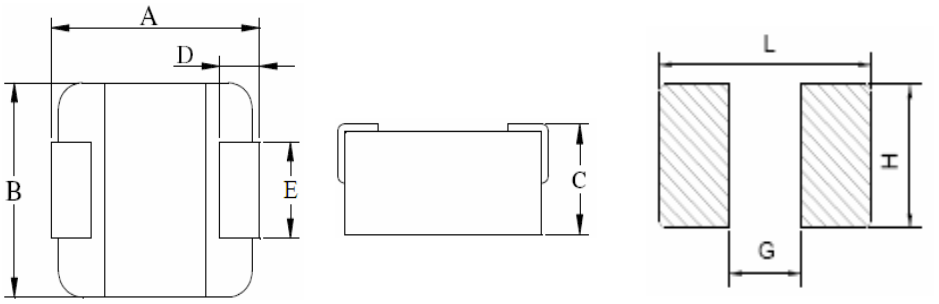

Series	A(mm)	B(mm)	C(mm)	D(mm)	E(mm)	L(mm)	G(mm)	H(mm)
ACDMR0308Q	3.1±0.3	3.1±0.3	0.8 Max	0.6±0.2	1.8±0.2	3.5 Ref	1.6 Ref	2.0 Ref

ELECTRICAL CHARACTERISTICS: **RoHS**

Parts Number	Inductance (uH)	Test Freq. (Hz)	Isat(A) ※1		Irms(A) ※2		DCR (mΩ)	
			Max	Typ	Max	Typ	Max	Typ
ACDMR0308Q-6R8MT	6.8±20%	100K/1V	1.4	1.6	1.0	1.2	460	400
ACDMR0308Q-100MT	10±20%	100K/1V	1.2	1.4	0.7	0.8	756	630

REMARK :

※1: Saturation Rated Current:DC current(A)that will cause Lo to drop approximately 30%

※2: Temperature Rise Current:DC current(A)that will cause an approximate △T of 40℃

※3: All test data is referenced to 25℃ ambient.Operating Temperature Range -55℃ to +125℃.

※4: The part temperature(ambient+temp rise)should not exceed 125℃ under worst case operating conditions. Circuit design,component placement,PWB trace size and thickness,airflow and other cooling provisions all affect the part temperature should be verified in the end application

ACDMR0310Q SERIES

MECHANICAL DIMENSION :

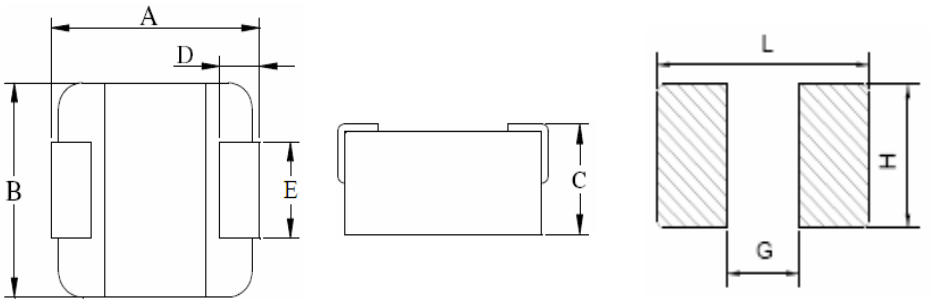

Series	A(mm)	B(mm)	C(mm)	D(mm)	E(mm)	L(mm)	G(mm)	H(mm)
ACDMR0308Q	3.1±0.3	3.1±0.3	1.0 Max	0.6±0.2	1.8±0.2	3.5 Ref	1.6 Ref	2.0 Ref

ELECTRICAL CHARACTERISTICS: **RoHS**

Parts Number	Inductance (uH)	Test Freq. (Hz)	Isat(A) ※1		Irms(A) ※2		DCR (mΩ)	
			Max	Typ	Max	Typ	Max	Typ
ACDMR0310Q-1R0MT	1.0±20%	100K/1V	3.7	4.2	2.8	3.2	44	36
ACDMR0310Q-2R2MT	2.2±20%	100K/1V	2.6	3.0	1.9	2.2	93	77
ACDMR0310Q-4R7MT	4.7±20%	100K/1V	1.7	1.9	1.3	1.5	250	200
ACDMR0310Q-6R8MT	6.8±20%	100K/1V	1.6	1.8	1.2	1.3	340	280
ACDMR0310Q-100MT	10±20%	100K/1V	1.35	1.5	1.1	1.2	400	330

REMARK :

※1: Saturation Rated Current:DC current(A)that will cause Lo to drop approximately 30%

※2: Temperature Rise Current:DC current(A)that will cause an approximate △T of 40℃

※3: All test data is referenced to 25℃ ambient.Operating Temperature Range -55℃ to +125℃.

※4: The part temperature(ambient+temp rise)should not exceed 125℃ under worst case operating conditions. Circuit design,component placement,PWB trace size and thickness,airflow and other cooling provisions all affect the part temperature should be verified in the end application

ACDMR0312T SERIES

MECHANICAL DIMENSION :

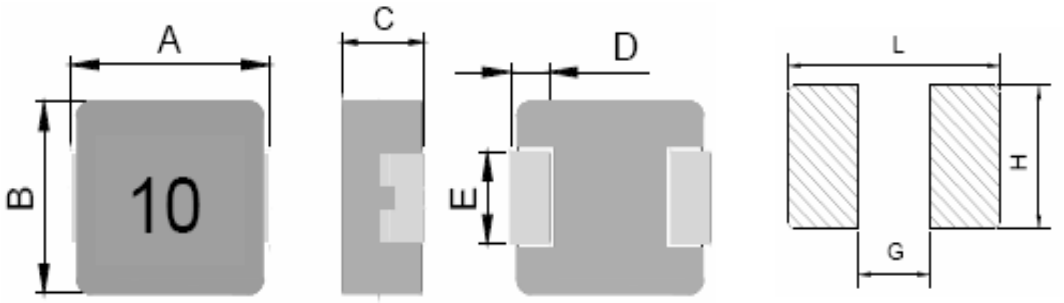

Series	A(mm)	B(mm)	C(mm)	D(mm)	E(mm)	L(mm)	G(mm)	H(mm)
ACDMR0312T	3.5±0.3	3.2±0.3	1.2 Max	0.7±0.2	1.2±0.2	4.1 Ref	1.9 Ref	1.45 Ref

ELECTRICAL CHARACTERISTICS: **RoHS**

Parts Number	Inductance (uH)	Test Freq. (Hz)	Isat(A) ※1	Irms(A) ※2	DCR (mΩ)	
			Typ	Typ	Max	Typ
ACDMR0312T-R15YT	0.15±30%	100K/1V	14.0	10.0	11	9.6
ACDMR0312T-R22MT	0.22±20%	100K/1V	10.0	6.5	17	14
ACDMR0312T-R33MT	0.33±20%	100K/1V	9.2	6.2	20	16
ACDMR0312T-R36MT	0.36±20%	100K/1V	8.5	6.0	23	18.5
ACDMR0312T-R47MT	0.47±20%	100K/1V	7.2	5.0	30	25
ACDMR0312T-R56MT	0.56±20%	100K/1V	6.6	4.5	36	31
ACDMR0312T-R68MT	0.68±20%	100K/1V	6.1	4.0	40	34
ACDMR0312T-R82MT	0.82±20%	100K/1V	5.8	3.5	48	41
ACDMR0312T-1R0MT	1.0±20%	100K/1V	5.5	3.3	60	50
ACDMR0312T-1R5MT	1.5±20%	100K/1V	4.0	3.0	85	71
ACDMR0312T-2R2MT	2.2±20%	100K/1V	3.4	2.7	115	98
ACDMR0312T-3R3MT	3.3±20%	100K/1V	3.1	2.0	210	191
ACDMR0312T-4R7MT	4.7±20%	100K/1V	2.8	1.6	293	266
ACDMR0312T-5R6MT	5.6±20%	100K/1V	2.2	1.5	360	310
ACDMR0312T-6R8MT	6.8±20%	100K/1V	2.0	1.4	400	360
ACDMR0312T-8R2MT	8.2±20%	100K/1V	1.7	1.2	463	420
ACDMR0312T-100MT	10±20%	100K/1V	1.4	1.0	550	498

REMARK :

※1: Saturation Rated Current:DC current(A)that will cause Lo to drop approximately 30%

※2: Temperature Rise Current:DC current(A)that will cause an approximate △T of 40℃

※3: All test data is referenced to 25℃ ambient.Operating Temperature Range -40℃ to +125℃.

※4: The part temperature(ambient+temp rise)should not exceed 125℃ under worst case operating conditions. Circuit design,component placement,PWB trace size and thickness,airflow and other cooling provisions all affect the part temperature should be verified in the end application

ACDMR0315T SERIES

MECHANICAL DIMENSION :

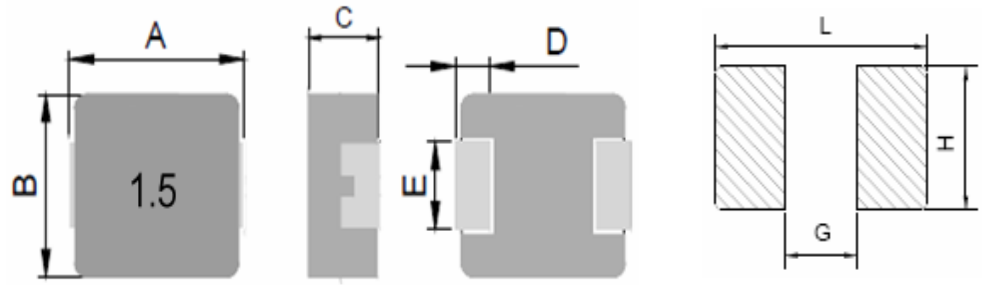

Series	A(mm)	B(mm)	C(mm)	D(mm)	E(mm)	L(mm)	G(mm)	H(mm)
ACDMR0315T	3.5±0.4	3.2±0.3	1.5 Max	0.7±0.2	1.2±0.2	4.1 Ref	1.9 Ref	1.45 Ref

ELECTRICAL CHARACTERISTICS: **RoHS**

Parts Number	Inductance (uH)	Test Freq. (Hz)	Isat(A) ※1	Irms(A) ※2	DCR (mΩ)	
			Typ	Typ	Max	Typ
ACDMR0315T-R22MT	0.22±20%	100K/1V	10.8	7.0	17	14
ACDMR0315T-R47MT	0.47±20%	100K/1V	8.0	5.5	28	23.3
ACDMR0315T-R56MT	0.56±20%	100K/1V	7.2	5.0	33	28
ACDMR0315T-R68MT	0.68±20%	100K/1V	6.5	4.5	42	34
ACDMR0315T-1R0MT	1.0±20%	100K/1V	5.8	3.6	50	41
ACDMR0315T-1R5MT	1.5±20%	100K/1V	4.0	3.4	77	64
ACDMR0315T-3R3MT	3.3±20%	100K/1V	3.2	2.5	205	170
ACDMR0315T-4R7MT	4.7±20%	100K/1V	2.8	1.9	264	220
ACDMR0315T-5R6MT	5.6±20%	100K/1V	2.3	1.7	318	265
ACDMR0315T-6R8MT	6.8±20%	100K/1V	2.0	1.5	348	290
ACDMR0315T-8R2MT	8.2±20%	100K/1V	1.8	1.3	468	390
ACDMR0315T-100MT	10±20%	100K/1V	1.6	1.2	522	435

REMARK :

※1: Saturation Rated Current:DC current(A)that will cause Lo to drop approximately 30%

※2: Temperature Rise Current:DC current(A)that will cause an approximate △T of 40℃

※3: All test data is referenced to 25℃ ambient.Operating Temperature Range -40℃ to +125℃.

※4: The part temperature(ambient+temp rise)should not exceed 125℃ under worst case operating conditions. Circuit design,component placement,PWB trace size and thickness,airflow and other cooling provisions all affect the part temperature should be verified in the end application

ACDMR0320T SERIES

MECHANICAL DIMENSION :

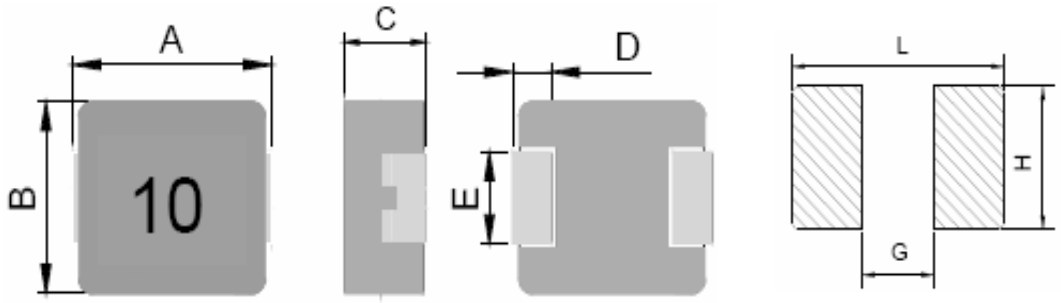

Series	A(mm)	B(mm)	C(mm)	D(mm)	E(mm)	L(mm)	G(mm)	H(mm)
ACDMR0320T	3.5±0.3	3.2±0.3	2.0 Max	0.7±0.2	1.2±0.2	4.1 Ref	1.9 Ref	1.45 Ref

ELECTRICAL CHARACTERISTICS: **RoHS**

Parts Number	Inductance (uH)	Test Freq. (Hz)	Isat(A) ※1	Irms(A) ※2	DCR (mΩ)	
			Typ	Typ	Max	Typ
ACDMR0320T-R10YT	0.1±30%	100K/1V	14.0	10.5	9	6.6
ACDMR0320T-R47MT	0.47±20%	100K/1V	9.0	7.0	23	19.7
ACDMR0320T-R68MT	0.68±20%	100K/1V	7.0	5.5	29	25.5
ACDMR0320T-1R0MT	1.0±20%	100K/1V	5.0	4.0	38	32
ACDMR0320T-1R5MT	1.5±20%	100K/1V	4.0	3.8	50	42
ACDMR0320T-2R2MT	2.2±20%	100K/1V	3.7	3.5	75	65
ACDMR0320T-3R3MT	3.3±20%	100K/1V	3.5	3.0	145	125
ACDMR0320T-4R7MT	4.7±20%	100K/1V	3.0	2.6	200	172
ACDMR0320T-5R6MT	5.6±20%	100K/1V	2.6	2.2	238	205
ACDMR0320T-6R8MT	6.8±20%	100K/1V	2.2	1.9	300	260
ACDMR0320T-8R2MT	8.2±20%	100K/1V	1.9	1.6	390	340
ACDMR0320T-100MT	10±20%	100K/1V	1.6	1.4	422	366

REMARK :

※1: Saturation Rated Current:DC current(A)that will cause Lo to drop approximately 30%

※2: Temperature Rise Current:DC current(A)that will cause an approximate △T of 40℃

※3: All test data is referenced to 25℃ ambient.Operating Temperature Range -40℃ to +125℃.

※4: The part temperature(ambient+temp rise)should not exceed 125℃ under worst case operating conditions. Circuit design,component placement,PWB trace size and thickness,airflow and other cooling provisions all affect the part temperature should be verified in the end application

ACDMR0408Q SERIES

MECHANICAL DIMENSION :

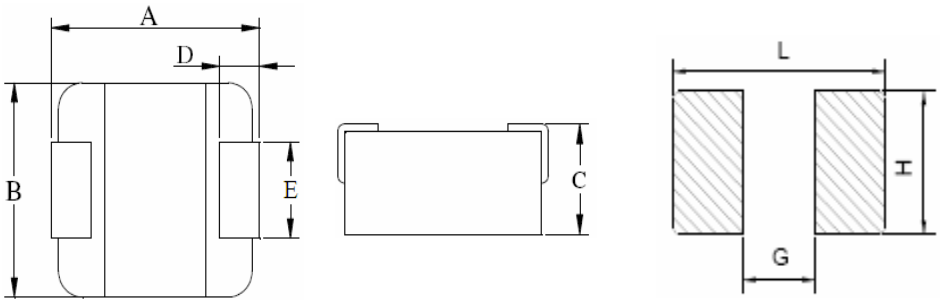

Series	A(mm)	B(mm)	C(mm)	D(mm)	E(mm)	L(mm)	G(mm)	H(mm)
ACDMR0408Q	4.1±0.3	4.1±0.3	0.8 Max	0.8±0.2	1.8±0.2	4.4 Ref	2.2 Ref	2.0 Ref

ELECTRICAL CHARACTERISTICS: **RoHS**

Parts Number	Inductance (uH)	Test Freq. (Hz)	Isat(A) ※1		Irms(A) ※2		DCR (mΩ)	
			Max	Typ	Max	Typ	Max	Typ
ACDMR0408Q-6R8MT	6.8±20%	100K/1V	1.8	2.2	1.5	1.6	312	260
ACDMR0408Q-100MT	10±20%	100K/1V	1.6	1.8	1.4	1.6	380	315

REMARK :

※1: Saturation Rated Current:DC current(A)that will cause Lo to drop approximately 30%

※2: Temperature Rise Current:DC current(A)that will cause an approximate △T of 40℃

※3: All test data is referenced to 25℃ ambient.Operating Temperature Range -55℃ to +125℃.

※4: The part temperature(ambient+temp rise)should not exceed 125℃ under worst case operating conditions. Circuit design,component placement,PWB trace size and thickness,airflow and other cooling provisions all affect the part temperature should be verified in the end application

ACDMR0410Q SERIES

MECHANICAL DIMENSION :

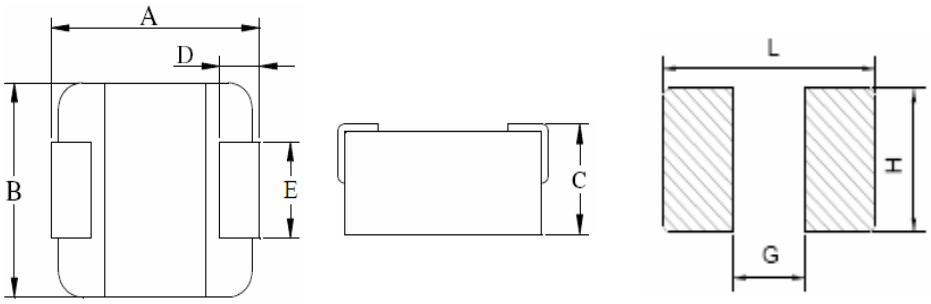

Series	A(mm)	B(mm)	C(mm)	D(mm)	E(mm)	L(mm)	G(mm)	H(mm)
ACDMR0410Q	4.1±0.3	4.1±0.3	1.0 Max	0.8±0.2	1.8 Typ	4.4 Ref	2.2 Ref	2.0 Ref

ELECTRICAL CHARACTERISTICS: **RoHS**

Parts Number	Inductance (uH)	Test Freq. (Hz)	Isat(A) ※1		Irms(A) ※2		DCR (mΩ)	
			Max	Typ	Max	Typ	Max	Typ
ACDMR0410Q-2R2MT	2.2±20%	100K/1V	3.5	4.3	2.6	2.9	100	82
ACDMR0410Q-4R7MT	4.7±20%	100K/1V	1.9	2.3	2.0	2.2	182	148
ACDMR0410Q-6R8MT	6.8±20%	100K/1V	1.7	2.1	1.4	1.6	255	210
ACDMR0410Q-100MT	10±20%	100K/1V	1.3	1.6	1.2	1.4	336	280

REMARK :

※1: Saturation Rated Current:DC current(A)that will cause Lo to drop approximately 30%

※2: Temperature Rise Current:DC current(A)that will cause an approximate △T of 40℃

※3: All test data is referenced to 25℃ ambient.Operating Temperature Range -55℃ to +125℃.

※4: The part temperature(ambient+temp rise)should not exceed 125℃ under worst case operating conditions. Circuit design,component placement,PWB trace size and thickness,airflow and other cooling provisions all affect the part temperature should be verified in the end application

ACDMR0410LZ SERIES

MECHANICAL DIMENSION :

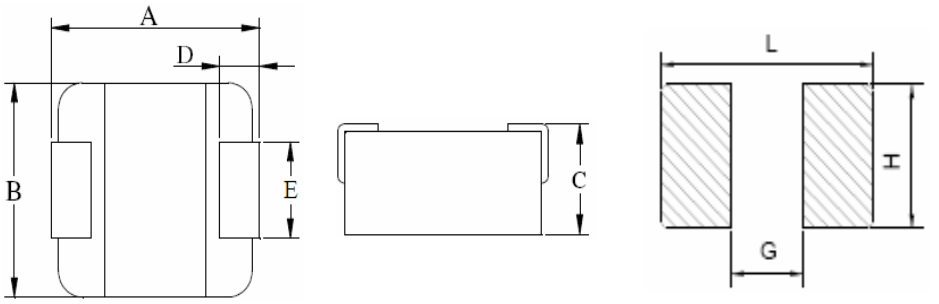

Series	A(mm)	B(mm)	C(mm)	D(mm)	E(mm)	L(mm)	G(mm)	H(mm)
ACDMR0410LZ	4.1±0.3	4.1±0.3	1.0 Max	0.8±0.2	1.8 Typ	4.4 Ref	2.2 Ref	2.0 Ref

ELECTRICAL CHARACTERISTICS: **RoHS**

Parts Number	Inductance (uH)	Test Freq. (Hz)	Isat(A) ※1		Irms(A) ※2		DCR (mΩ)	
			Max	Typ	Max	Typ	Max	Typ
ACDMR0410LZ-100MT	10±20%	100K/1V	1.3	1.6	1.3	1.6	236	197

REMARK :

※1: Saturation Rated Current:DC current(A)that will cause Lo to drop approximately 30%

※2: Temperature Rise Current:DC current(A)that will cause an approximate △T of 40℃

※3: All test data is referenced to 25℃ ambient.Operating Temperature Range -55℃ to +125℃.

※4: The part temperature(ambient+temp rise)should not exceed 125℃ under worst case operating conditions. Circuit design,component placement,PWB trace size and thickness,airflow and other cooling provisions all affect the part temperature should be verified in the end application

ACDMR0412Q SERIES

MECHANICAL DIMENSION :

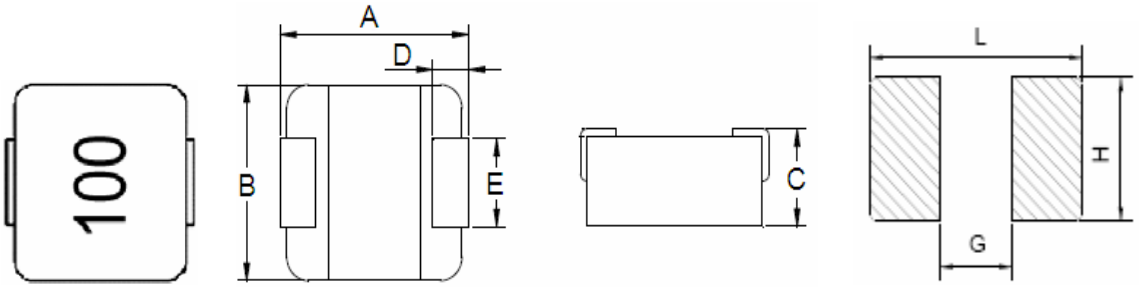

Series	A(mm)	B(mm)	C(mm)	D(mm)	E(mm)	L(mm)	G(mm)	H(mm)
ACDMR0412Q	4.1±0.3	4.1±0.3	1.2 Max	0.8±0.2	1.8±0.2	4.4 Ref	2.2 Ref	2.0 Ref

ELECTRICAL CHARACTERISTICS: **RoHS**

Parts Number	Inductance (uH)	Test Freq. (Hz)	Isat(A) ※1		Irms(A) ※2		DCR (mΩ)	
			Max	Typ	Max	Typ	Max	Typ
ACDMR0412Q-R47MT	0.47±20%	100K/1V	8.3	9.4	8.2	9.2	18	15
ACDMR0412Q-1R0MT	1.0±20%	100K/1V	4.1	4.6	3.7	4.1	33	27
ACDMR0412Q-2R2MT	2.2±20%	100K/1V	3.5	4.0	3.4	3.8	63	52
ACDMR0412Q-3R3MT	3.3±20%	100K/1V	2.7	3.0	2.8	3.1	98	82
ACDMR0412Q-4R7MT	4.7±20%	100K/1V	2.2	2.5	2.6	2.9	113	94
ACDMR0412Q-100MT	10±20%	100K/1V	1.4	1.6	1.6	1.8	240	200

REMARK :

※1: Saturation Rated Current:DC current(A)that will cause Lo to drop approximately 30%

※2: Temperature Rise Current:DC current(A)that will cause an approximate △T of 40℃

※3: All test data is referenced to 25℃ ambient.Operating Temperature Range -55℃ to +125℃.

※4: The part temperature(ambient+temp rise)should not exceed 125℃ under worst case operating conditions. Circuit design,component placement,PWB trace size and thickness,airflow and other cooling provisions all affect the part temperature should be verified in the end application

ACDMR0412T SERIES

MECHANICAL DIMENSION :

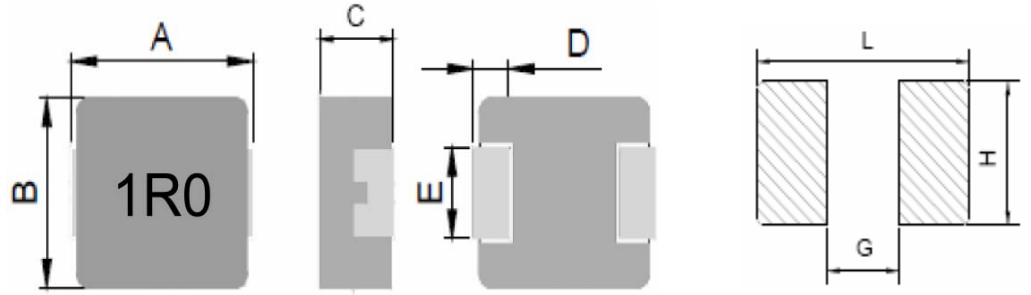

Series	A(mm)	B(mm)	C(mm)	D(mm)	E(mm)	L(mm)	G(mm)	H(mm)
ACDMR0412T	4.45±0.35	4.06±0.35	1.2 Max	0.76±0.3	2.0±0.2	5.2 Ref	2.2 Ref	2.4 Ref

ELECTRICAL CHARACTERISTICS: **RoHS**

Parts Number	Inductance (uH)	Test Freq. (Hz)	Isat(A) ※1	Irms(A) ※2	DCR (mΩ)	
			Typ	Typ	Max	Typ
ACDMR0412T-R10YT	0.1±30%	100K/1V	25.0	11.5	5.5	4.3
ACDMR0412T-R22MT	0.22±20%	100K/1V	20.0	8.5	8	6.6
ACDMR0412T-R47MT	0.47±20%	100K/1V	6.5	6.0	20	18
ACDMR0412T-R68MT	0.68±20%	100K/1V	6.0	5.0	37	32
ACDMR0412T-1R0MT	1.0±20%	100K/1V	6.0	4.0	47	41
ACDMR0412T-1R5MT	1.5±20%	100K/1V	4.0	3.0	63.3	55
ACDMR0412T-2R2MT	2.2±20%	100K/1V	3.5	2.8	80	69.2
ACDMR0412T-3R3MT	3.3±20%	100K/1V	3.0	2.3	97	84
ACDMR0412T-4R7MT	4.7±20%	100K/1V	2.5	2.0	145	128
ACDMR0412T-5R6MT	5.6±20%	100K/1V	2.3	1.7	208	180
ACDMR0412T-6R8MT	6.8±20%	100K/1V	1.7	1.5	360	300
ACDMR0412T-8R2MT	8.2±20%	100K/1V	1.4	1.3	376	313
ACDMR0412T-100MT	10±20%	100K/1V	1.4	1.3	463	410

REMARK :

※1: Saturation Rated Current:DC current(A)that will cause Lo to drop approximately 30%

※2: Temperature Rise Current:DC current(A)that will cause an approximate △T of 40℃

※3: All test data is referenced to 25℃ ambient.Operating Temperature Range -40℃ to +125℃.

※4: The part temperature(ambient+temp rise)should not exceed 125℃ under worst case operating conditions. Circuit design,component placement,PWB trace size and thickness,airflow and other cooling provisions all affect the part temperature should be verified in the end application

ACDMR0412M SERIES

MECHANICAL DIMENSION :

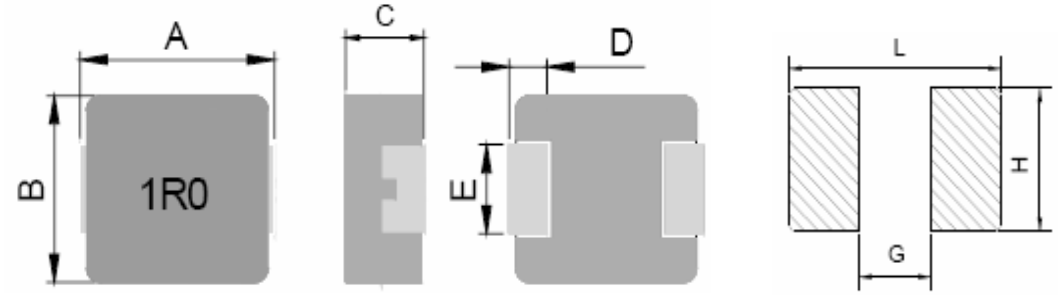

Series	A(mm)	B(mm)	C(mm)	D(mm)	E(mm)	L(mm)	G(mm)	H(mm)
ACDMR0412M	4.4±0.45	4.2±0.35	1.2 Max	0.8±0.3	2.0±0.3	5.2 Ref	2.2 Ref	2.5 Ref

ELECTRICAL CHARACTERISTICS: **RoHS**

Parts Number	Inductance (uH)	Test Freq. (Hz)	Isat(A) ※1	Irms(A) ※2	DCR (mΩ)	
			Typ	Typ	Max	Typ
ACDMR0412M-R15MT	0.15±20%	100K/1V	15	7.5	9	8
ACDMR0412M-R22MT	0.22±20%	100K/1V	11	7	11	9.5
ACDMR0412M-R33MT	0.33±20%	100K/1V	8.4	6.5	19	17
ACDMR0412M-R47MT	0.47±20%	100K/1V	6.8	6	21	19
ACDMR0412M-R68MT	0.68±20%	100K/1V	6	4.7	36	32
ACDMR0412M-1R0MT	1.0±20%	100K/1V	5.5	4.5	47	43
ACDMR0412M-1R5MT	1.5±20%	100K/1V	4	3.25	75	68
ACDMR0412M-2R2MT	2.2±20%	100K/1V	3.5	2.75	83.5	79.4
ACDMR0412M-4R7MT	4.7±20%	100K/1V	2.8	1.8	195	175

REMARK :

※1: Saturation Rated Current:DC current(A)that will cause Lo to drop approximately 30%

※2: Temperature Rise Current:DC current(A)that will cause an approximate △T of 40℃

※3: All test data is referenced to 25℃ ambient.Operating Temperature Range -40℃ to +125℃.

※4: The part temperature(ambient+temp rise)should not exceed 125℃ under worst case operating conditions. Circuit design,component placement,PWB trace size and thickness,airflow and other cooling provisions all affect the part temperature should be verified in the end application

ACDMR0412CST SERIES

MECHANICAL DIMENSION :

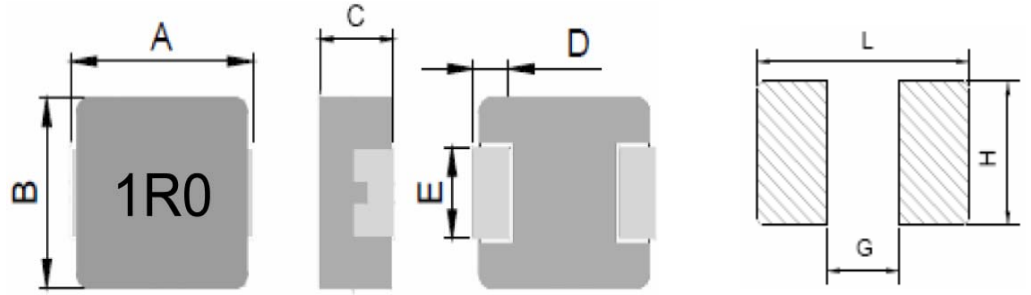

Series	A(mm)	B(mm)	C(mm)	D(mm)	E(mm)	L(mm)	G(mm)	H(mm)
ACDMR0412CST	4.45±0.35	4.1±0.3	1.2 Max	0.8±0.25	2.0±0.2	5.2 Ref	2.2 Ref	2.5 Ref

ELECTRICAL CHARACTERISTICS: **RoHS**

Parts Number	Inductance (uH)	Test Freq. (Hz)	Isat(A) ※1		Irms(A) ※2		DCR (mΩ)	
			Max	Typ	Max	Typ	Max	Typ
ACDMR0412CST-R10YT	0.1±30%	100K/1V	25	28	11.5	13	4.8	4.3
ACDMR0412CST-R33MT	0.33±20%	100K/1V	9	11	7	8	15	13.6
ACDMR0412CST-R47MT	0.47±20%	100K/1V	8	10	6	7	18.5	16.6
ACDMR0412CST-R68MT	0.68±20%	100K/1V	7	8	5	6	36	31
ACDMR0412CST-1R0MT	1.0±20%	100K/1V	5	6	4	4.5	47	42
ACDMR0412CST-1R5MT	1.5±20%	100K/1V	4.5	5.5	3	3.5	64	58
ACDMR0412CST-2R2MT	2.2±20%	100K/1V	4	5	2.5	3	79	69
ACDMR0412CST-3R3MT	3.3±20%	100K/1V	3	3.5	2	2.5	97	84
ACDMR0412CST-4R7MT	4.7±20%	100K/1V	2.6	3.1	1.8	2.2	141	122
ACDMR0412CST-6R8MT	6.8±20%	100K/1V	2	2.4	1.6	1.8	276	240
ACDMR0412CST-8R2MT	8.2±20%	100K/1V	1.9	2.2	1.4	1.6	376	324
ACDMR0412CST-100MT	10±20%	100K/1V	1.6	2	1.2	1.5	440	380

REMARK :

※1: Saturation Rated Current:DC current(A)that will cause Lo to drop approximately 30%

※2: Temperature Rise Current:DC current(A)that will cause an approximate △T of 40℃

※3: All test data is referenced to 25℃ ambient.Operating Temperature Range -40℃ to +125℃.

※4: The part temperature(ambient+temp rise)should not exceed 125℃ under worst case operating conditions. Circuit design,component placement,PWB trace size and thickness,airflow and other cooling provisions all affect the part temperature should be verified in the end application

ACDMR0418Q SERIES

MECHANICAL DIMENSION :

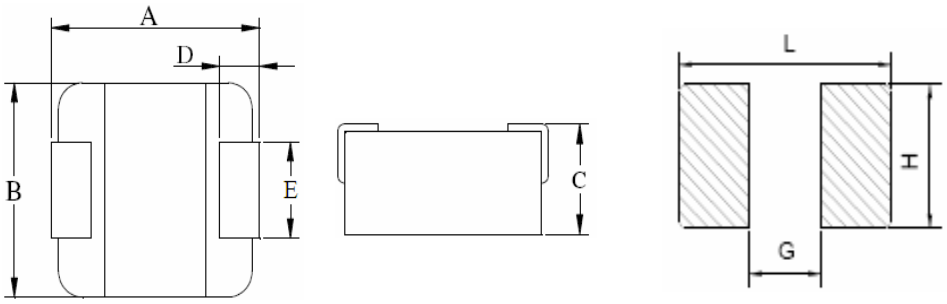

Series	A(mm)	B(mm)	C(mm)	D(mm)	E(mm)	L(mm)	G(mm)	H(mm)
ACDMR0418Q	4.1±0.3	4.1±0.3	1.8 Max	0.8±0.3	3.0±0.3	4.4 Ref	2.2 Ref	3.5 Ref

ELECTRICAL CHARACTERISTICS: **RoHS**

Parts Number	Inductance (uH)	Test Freq. (Hz)	Isat(A) ※1		Irms(A) ※2		DCR (mΩ)	
			Max	Typ	Max	Typ	Max	Typ
ACDMR0418Q-R47MT	0.47±20%	100K/1V	8.5	9.6	9.0	10	16	13
ACDMR0418Q-R68MT	0.68±20%	100K/1V	6.6	7.4	7.6	8.5	21	17
ACDMR0418Q-1R0MT	1.0±20%	100K/1V	6.3	7.0	6.3	7.0	26	21
ACDMR0418Q-1R5MT	1.5±20%	100K/1V	5.4	6.4	5.0	5.5	38.4	32
ACDMR0418Q-2R2MT	2.2±20%	100K/1V	4.5	5.2	4.2	4.7	46	39
ACDMR0418Q-3R3MT	3.3±20%	100K/1V	4.0	4.5	3.5	3.8	69	58
ACDMR0418Q-4R7MT	4.7±20%	100K/1V	2.7	3.2	3.1	3.5	84	70
ACDMR0418Q-6R8MT	6.8±20%	100K/1V	2.4	2.6	2.5	2.8	132	110
ACDMR0418Q-100MT	10±20%	100K/1V	2.0	2.2	1.9	2.1	192	160

REMARK :

※1: Saturation Rated Current:DC current(A)that will cause Lo to drop approximately 30%

※2: Temperature Rise Current:DC current(A)that will cause an approximate △T of 40℃

※3: All test data is referenced to 25℃ ambient.Operating Temperature Range -55℃ to +125℃.

※4: The part temperature(ambient+temp rise)should not exceed 125℃ under worst case operating conditions. Circuit design,component placement,PWB trace size and thickness,airflow and other cooling provisions all affect the part temperature should be verified in the end application

ACDMR0420M SERIES

MECHANICAL DIMENSION :

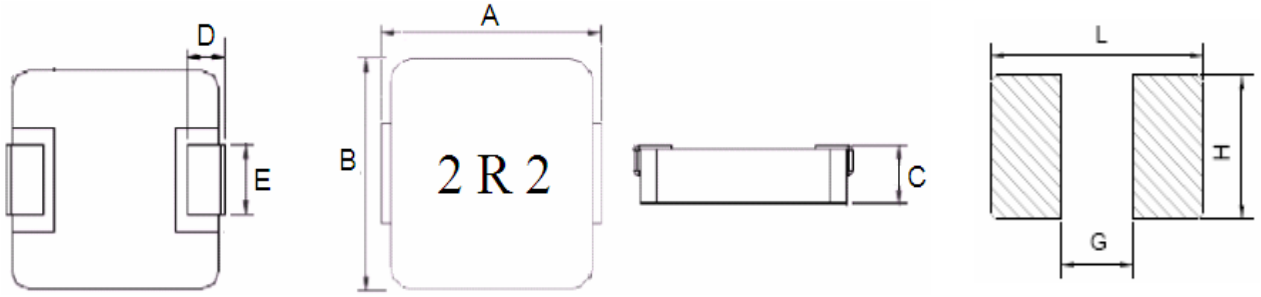

Series	A(mm)	B(mm)	C(mm)	D(mm)	E(mm)	L(mm)	G(mm)	H(mm)
ACDMR0420M	4.4±0.45	4.2±0.35	2.0 Max	0.8±0.3	2.0±0.3	5.2 Ref	2.2 Ref	2.5 Ref

ELECTRICAL CHARACTERISTICS: **RoHS**

Parts Number	Inductance (uH)	Test Freq. (Hz)	Isat(A) ※1	Irms(A) ※2	DCR (mΩ)	
			Typ	Typ	Max	Typ
ACDMR0420M-R10MT	0.1±20%	100K/1V	22	13	4	3.5
ACDMR0420M-R22MT	0.22±20%	100K/1V	12.5	9.5	6.6	6
ACDMR0420M-R33MT	0.33±20%	100K/1V	12	10	11	9
ACDMR0420M-R47MT	0.47±20%	100K/1V	9.5	7.5	14	12.5
ACDMR0420M-R56MT	0.56±20%	100K/1V	10	7	16	14
ACDMR0420M-R68MT	0.68±20%	100K/1V	9	7	18	16
ACDMR0420M-1R0MT	1.0±20%	100K/1V	7	6	27	24
ACDMR0420M-1R2MT	1.2±20%	100K/1V	7	6	27	24
ACDMR0420M-1R5MT	1.5±20%	100K/1V	6	5	46	38
ACDMR0420M-2R2MT	2.2±20%	100K/1V	5	4.5	58	52
ACDMR0420M-3R3MT	3.3±20%	100K/1V	4	3.3	87	74
ACDMR0420M-4R7MT	4.7±20%	100K/1V	3	2.8	105	92
ACDMR0420M-6R8MT	6.8±20%	100K/1V	2.5	2.4	175	160
ACDMR0420M-100MT	10±20%	100K/1V	2.2	1.6	282	256
ACDMR0420M-220MT	22±20%	100K/1V	1.65	1.2	363	330

REMARK :

※1: Saturation Rated Current:DC current(A)that will cause Lo to drop approximately 30%

※2: Temperature Rise Current:DC current(A)that will cause an approximate △T of 40℃

※3: All test data is referenced to 25℃ ambient.Operating Temperature Range -55℃ to +125℃.

※4: The part temperature(ambient+temp rise)should not exceed 125℃ under worst case operating conditions. Circuit design,component placement,PWB trace size and thickness,airflow and other cooling provisions all affect the part temperature should be verified in the end application

ACDMR0420T SERIES

MECHANICAL DIMENSION :

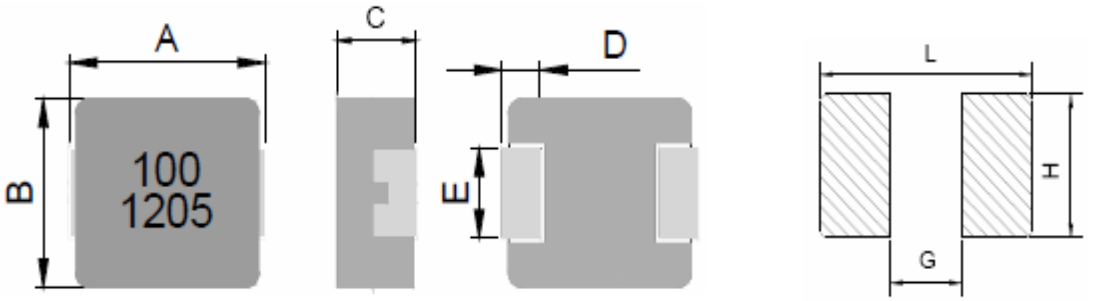

Series	A(mm)	B(mm)	C(mm)	D(mm)	E(mm)	L(mm)	G(mm)	H(mm)
ACDMR0420T	4.45±0.35	4.06±0.35	2.0 Max	0.76±0.3	2.0±0.2	5.2 Ref	2.2 Ref	2.4 Ref

ELECTRICAL CHARACTERISTICS: **RoHS**

Parts Number	Inductance (uH)	Test Freq. (Hz)	Isat(A) ※1	Irms(A) ※2	DCR (mΩ)	
			Typ	Typ	Max	Typ
ACDMR0420T-R10YT	0.1±30%	100K/1V	35	14	5.4	3.2
ACDMR0420T-R18YT	0.18±30%	100K/1V	28	13.5	4	4.6
ACDMR0420T-R22YT	0.22±30%	100K/1V	24	13	7.3	6.6
ACDMR0420T-R47MT	0.47±20%	100K/1V	12	8	14	11.2
ACDMR0420T-R56MT	0.56±20%	100K/1V	10	7.3	16	13.5
ACDMR0420T-R68MT	0.68±20%	100K/1V	10	7	19	16
ACDMR0420T-1R0MT	1.0±20%	100K/1V	8.5	5	27	22
ACDMR0420T-1R2MT	1.2±20%	100K/1V	7.8	4.8	30	25
ACDMR0420T-1R5MT	1.5±20%	100K/1V	7	4.5	42	34.8
ACDMR0420T-2R2MT	2.2±20%	100K/1V	6	4	61	51
ACDMR0420T-3R3MT	3.3±20%	100K/1V	4	3.5	76	69
ACDMR0420T-4R7MT	4.7±20%	100K/1V	3.5	2.6	105	95
ACDMR0420T-5R6MT	5.6±20%	100K/1V	3	2.2	125	112
ACDMR0420T-6R8MT	6.8±20%	100K/1V	2.8	2.1	172	150
ACDMR0420T-8R2MT	8.2±20%	100K/1V	2.5	2	180	158
ACDMR0420T-100MT	10±20%	100K/1V	2.3	1.8	243	215
ACDMR0420T-150MT	15±20%	100K/1V	1.9	1.5	374	325
ACDMR0420T-220MT	22±20%	100K/1V	1.4	1.2	500	470

REMARK :

※1: Saturation Rated Current:DC current(A)that will cause Lo to drop approximately 30%

※2: Temperature Rise Current:DC current(A)that will cause an approximate △T of 40℃

※3: All test data is referenced to 25℃ ambient.Operating Temperature Range -40℃ to +125℃.

※4: The part temperature(ambient+temp rise)should not exceed 125℃ under worst case operating conditions. Circuit design,component placement,PWB trace size and thickness,airflow and other cooling provisions all affect the part temperature should be verified in the end application

ACDMR0512T SERIES

MECHANICAL DIMENSION :

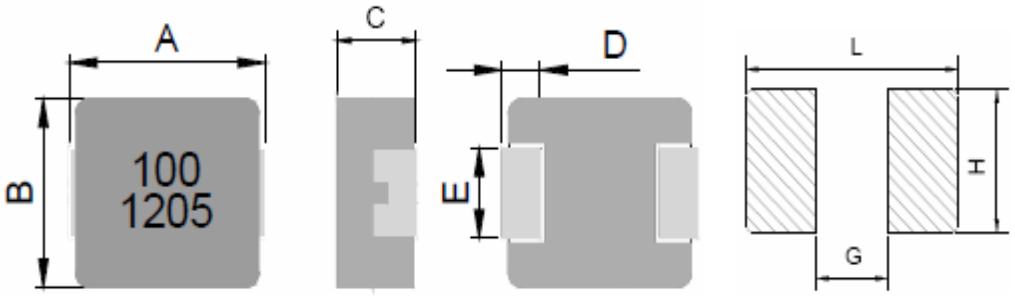

Series	A(mm)	B(mm)	C(mm)	D(mm)	E(mm)	L(mm)	G(mm)	H(mm)
ACDMR0512T	5.7±0.4	5.2±0.3	1.2 Max	1.1±0.3	2.5±0.3	6.2 Ref	2.2 Ref	2.8 Ref

ELECTRICAL CHARACTERISTICS: **RoHS**

Parts Number	Inductance (uH)	Test Freq. (Hz)	Isat(A) ※1	Irms(A) ※2	DCR (mΩ)	
			Typ	Typ	Max	Typ
ACDMR0512T-R10YT	0.1±30%	100K/1V	14.5	14	5.2	4.3
ACDMR0512T-R15YT	0.15±30%	100K/1V	14.2	12	6	4.5
ACDMR0512T-R22MT	0.22±20%	100K/1V	14	10.7	6.7	5.5
ACDMR0512T-R33MT	0.33±20%	100K/1V	13.5	8.5	9.4	7.8
ACDMR0512T-R36MT	0.36±20%	100K/1V	13	8	11.5	10
ACDMR0512T-R47MT	0.47±20%	100K/1V	11	7	15.8	13.6
ACDMR0512T-R68MT	0.68±20%	100K/1V	9	6	24.5	21.5
ACDMR0512T-1R0MT	1.0±20%	100K/1V	6	5	30	26
ACDMR0512T-1R2MT	1.2±20%	100K/1V	5.5	4.5	40	33
ACDMR0512T-1R5MT	1.5±20%	100K/1V	5	4	44	38
ACDMR0512T-2R2MT	2.2±20%	100K/1V	4	3.5	75	65
ACDMR0512T-3R3MT	3.3±20%	100K/1V	3.8	3	86	75
ACDMR0512T-5R6MT	5.6±20%	100K/1V	3.2	2.4	201	175
ACDMR0512T-6R8MT	6.8±20%	100K/1V	3	2	222	193
ACDMR0512T-8R2MT	8.2±20%	100K/1V	2.8	1.7	378	327
ACDMR0512T-100MT	10±20%	100K/1V	1.8	1.5	385	335
ACDMR0512T-150MT	15±20%	100K/1V	1.6	1.3	470	410

REMARK :

※1: Saturation Rated Current:DC current(A)that will cause Lo to drop approximately 30%

※2: Temperature Rise Current:DC current(A)that will cause an approximate △T of 40℃

※3: All test data is referenced to 25℃ ambient.Operating Temperature Range -40℃ to +125℃.

※4: The part temperature(ambient+temp rise)should not exceed 125℃ under worst case operating conditions. Circuit design,component placement,PWB trace size and thickness,airflow and other cooling provisions all affect the part temperature should be verified in the end application

ACDMR0512CST SERIES

MECHANICAL DIMENSION :

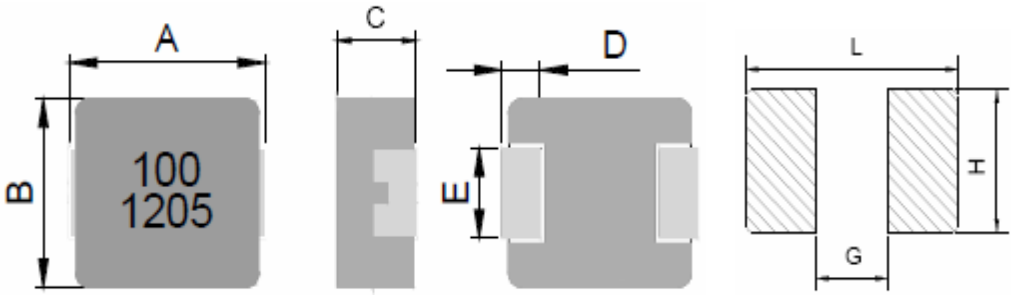

Series	A(mm)	B(mm)	C(mm)	D(mm)	E(mm)	L(mm)	G(mm)	H(mm)
ACDMR0512CST	5.7±0.4	5.2±0.3	1.2 Max	1.0±0.3	2.5±0.3	6.0 Ref	2.8 Ref	2.5 Ref

ELECTRICAL CHARACTERISTICS: **RoHS**

Parts Number	Inductance (uH)	Test Freq. (Hz)	Isat(A) ※1		Irms(A) ※2		DCR (mΩ)	
			Max	Typ	Max	Typ	Max	Typ
ACDMR0512CST-R10YT	0.1±30%	100K/1V	20	25	14	16	4.51	4.1
ACDMR0512CST-R15YT	0.15±30%	100K/1V	18	21	13	15	5.2	4.7
ACDMR0512CST-R22MT	0.22±20%	100K/1V	16	19	11	13	6.4	5.8
ACDMR0512CST-R33MT	0.33±20%	100K/1V	14.5	16.5	9	10.5	10.8	9.7
ACDMR0512CST-R36MT	0.36±20%	100K/1V	14	16	8	9.5	11.5	10
ACDMR0512CST-R47MT	0.47±20%	100K/1V	12	14	7	8.5	15.8	13.6
ACDMR0512CST-R68MT	0.68±20%	100K/1V	10	12	6	7	24.5	21.5
ACDMR0512CST-1R0MT	1.0±20%	100K/1V	8	9.5	5	6	30	26
ACDMR0512CST-1R5MT	1.5±20%	100K/1V	6.5	8	4	5	43	37
ACDMR0512CST-2R2MT	2.2±20%	100K/1V	4.5	5	3.3	3.8	78	68
ACDMR0512CST-3R3MT	3.3±20%	100K/1V	4	4.5	3.1	3.4	91	80
ACDMR0512CST-4R7MT	4.7±20%	100K/1V	3.5	4	2.5	2.8	120	105
ACDMR0512CST-5R6MT	5.6±20%	100K/1V	3.2	3.7	2	2.4	201	175
ACDMR0512CST-6R8MT	6.8±20%	100K/1V	3	3.4	2	2.2	235	210
ACDMR0512CST-8R2MT	8.2±20%	100K/1V	2.8	3.1	1.7	2	383	333

REMARK :

※1: Saturation Rated Current:DC current(A)that will cause Lo to drop approximately 30%

※2: Temperature Rise Current:DC current(A)that will cause an approximate △T of 40℃

※3: All test data is referenced to 25℃ ambient.Operating Temperature Range -40℃ to +125℃.

※4: The part temperature(ambient+temp rise)should not exceed 125℃ under worst case operating conditions. Circuit design,component placement,PWB trace size and thickness,airflow and other cooling provisions all affect the part temperature should be verified in the end application

ACDMR0515T SERIES

MECHANICAL DIMENSION :

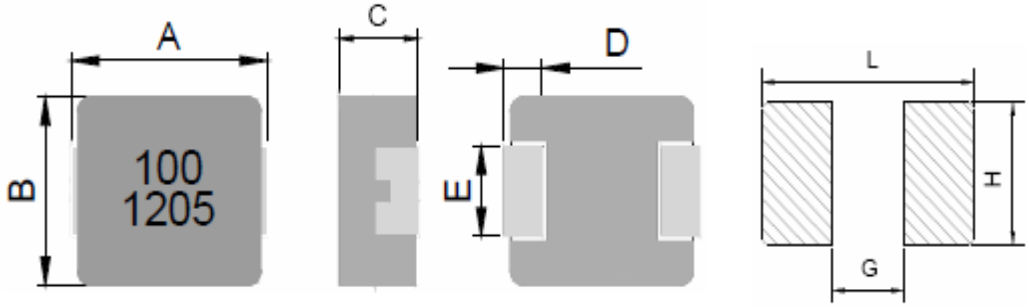

Series	A(mm)	B(mm)	C(mm)	D(mm)	E(mm)	L(mm)	G(mm)	H(mm)
ACDMR0515T	5.7±0.4	5.2±0.3	1.5 Max	1.1±0.3	2.5±0.3	6.2 Ref	2.2 Ref	2.8 Ref

ELECTRICAL CHARACTERISTICS: **RoHS**

Parts Number	Inductance (uH)	Test Freq. (Hz)	Isat(A) ※1	Irms(A) ※2	DCR (mΩ)	
			Typ	Typ	Max	Typ
ACDMR0515T-R12YT	0.12±30%	100K/1V	28	17	3.9	3.3
ACDMR0515T-R15YT	0.15±30%	100K/1V	25	16	4.1	3.6
ACDMR0515T-R20MT	0.2±20%	100K/1V	22.5	15	4.2	3.8
ACDMR0515T-R22YT	0.22±30%	100K/1V	20	12	6.5	5
ACDMR0515T-R33MT	0.33±20%	100K/1V	16	9	9.8	8.5
ACDMR0515T-R36MT	0.36±20%	100K/1V	15.5	8.5	12.5	10
ACDMR0515T-R47MT	0.47±20%	100K/1V	15	8	13.8	12
ACDMR0515T-R68MT	0.68±20%	100K/1V	13	7	16.2	14
ACDMR0515T-1R0MT	1.0±20%	100K/1V	9	6	25.3	22
ACDMR0515T-1R5MT	1.5±20%	100K/1V	7	4.5	45	39
ACDMR0515T-2R2MT	2.2±20%	100K/1V	6	4	52	45
ACDMR0515T-3R3MT	3.3±20%	100K/1V	4.5	3.2	90	78
ACDMR0515T-4R7MT	4.7±20%	100K/1V	4	2.7	118	103
ACDMR0515T-5R6MT	5.6±20%	100K/1V	3.2	2.4	152	126
ACDMR0515T-6R8MT	6.8±20%	100K/1V	3	2.3	171	142
ACDMR0515T-8R2MT	8.2±20%	100K/1V	2.6	2.1	210	175
ACDMR0515T-100MT	10±20%	100K/1V	2.3	2	235	210
ACDMR0515T-150MT	15±20%	100K/1V	2	1.6	380	310
ACDMR0515T-220MT	22±20%	100K/1V	1.7	1.2	466	405

REMARK :

※1: Saturation Rated Current:DC current(A)that will cause Lo to drop approximately 30%

※2: Temperature Rise Current:DC current(A)that will cause an approximate △T of 40℃

※3: All test data is referenced to 25℃ ambient.Operating Temperature Range -40℃ to +125℃.

※4: The part temperature(ambient+temp rise)should not exceed 125℃ under worst case operating conditions. Circuit design,component placement,PWB trace size and thickness,airflow and other cooling provisions all affect the part temperature should be verified in the end application

ACDMR0518M SERIES

MECHANICAL DIMENSION :

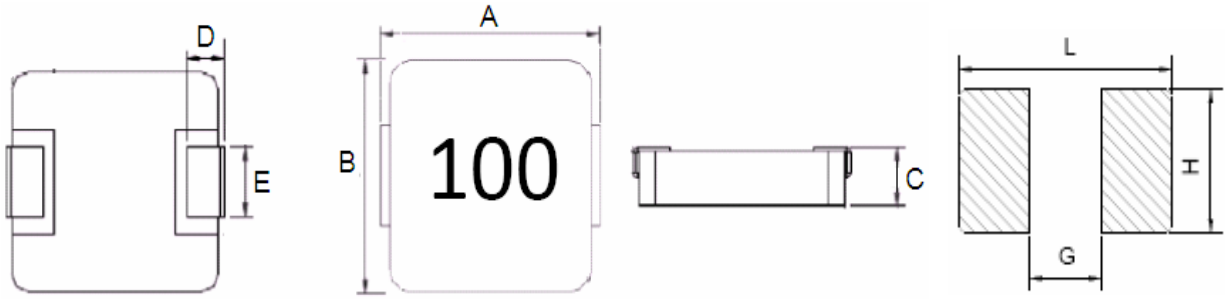

Series	A(mm)	B(mm)	C(mm)	D(mm)	E(mm)	L(mm)	G(mm)	H(mm)
ACDMR0518M	5.4±0.4	5.2±0.3	1.8 Max	1.2±0.2	2.2±0.3	6.0 Ref	2.2 Ref	2.5 Ref

ELECTRICAL CHARACTERISTICS: **RoHS**

Parts Number	Inductance (uH)	Test Freq. (Hz)	Isat(A) ※1	Irms(A) ※2	DCR (mΩ)	
			Typ	Typ	Max	Typ
ACDMR0518M-R47MT	0.47±20%	100K/1V	15.5	10.5	9	7.7
ACDMR0518M-R56MT	0.56±20%	100K/1V	15	9.5	10	8
ACDMR0518M-1R0MT	1.0±20%	100K/1V	9	8	17	15
ACDMR0518M-1R5MT	1.5±20%	100K/1V	9	7.5	26	21
ACDMR0518M-2R2MT	2.2±20%	100K/1V	6.5	5	35	30
ACDMR0518M-3R3MT	3.3±20%	100K/1V	5	4.5	58	52
ACDMR0518M-4R7MT	4.7±20%	100K/1V	4	3.5	85	78
ACDMR0518M-6R8MT	6.8±20%	100K/1V	3.4	2.8	120	107
ACDMR0518M-100MT	10±20%	100K/1V	3	2.5	155	140

REMARK :

※1: Saturation Rated Current:DC current(A)that will cause Lo to drop approximately 30%

※2: Temperature Rise Current:DC current(A)that will cause an approximate △T of 40℃

※3: All test data is referenced to 25℃ ambient.Operating Temperature Range -55℃ to +125℃.

※4: The part temperature(ambient+temp rise)should not exceed 125℃ under worst case operating conditions. Circuit design,component placement,PWB trace size and thickness,airflow and other cooling provisions all affect the part temperature should be verified in the end application

ACDMR0518T SERIES

MECHANICAL DIMENSION :

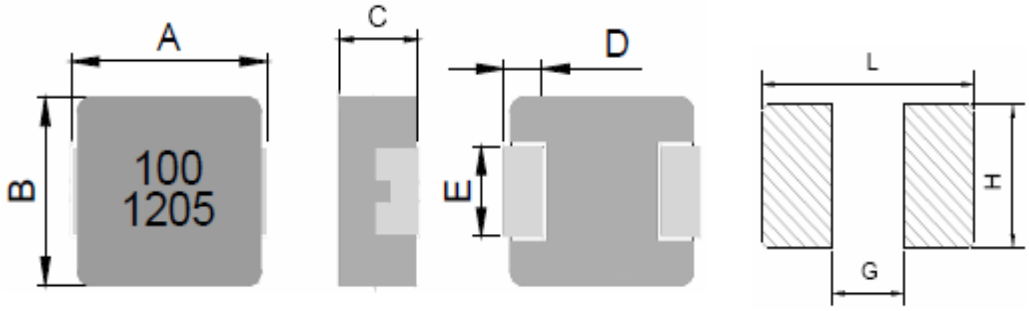

Series	A(mm)	B(mm)	C(mm)	D(mm)	E(mm)	L(mm)	G(mm)	H(mm)
ACDMR0518T	5.7±0.4	5.2±0.3	1.8 Max	1.1±0.3	2.5±0.3	6.2 Ref	2.2 Ref	2.8 Ref

ELECTRICAL CHARACTERISTICS: **RoHS**

Parts Number	Inductance (uH)	Test Freq. (Hz)	Isat(A) ※1	Irms(A) ※2	DCR (mΩ)	
			Typ	Typ	Max	Typ
ACDMR0518T-R33MT	0.33±20%	100K/1V	15	11	8.6	7.5
ACDMR0518T-R47MT	0.47±20%	100K/1V	14	10	11.3	9.8
ACDMR0518T-R56MT	0.56±20%	100K/1V	13.5	9.5	13	11
ACDMR0518T-R68MT	0.68±20%	100K/1V	13	9	14.3	12.4
ACDMR0518T-1R0MT	1.0±20%	100K/1V	10	6.8	21	18.2
ACDMR0518T-1R5MT	1.5±20%	100K/1V	9	6	30	26
ACDMR0518T-2R2MT	2.2±20%	100K/1V	7.5	4.5	48.3	42
ACDMR0518T-3R3MT	3.3±20%	100K/1V	5	3.5	69	60
ACDMR0518T-4R7MT	4.7±20%	100K/1V	4.5	3	98	85
ACDMR0518T-5R6MT	5.6±20%	100K/1V	4	2.5	127	110
ACDMR0518T-6R8MT	6.8±20%	100K/1V	3.5	2.4	137	118
ACDMR0518T-8R2MT	8.2±20%	100K/1V	3	2.3	165	143
ACDMR0518T-100MT	10±20%	100K/1V	2.8	2.3	190	165
ACDMR0518T-150MT	15±20%	100K/1V	2.3	1.7	318	275

REMARK :

※1: Saturation Rated Current:DC current(A)that will cause Lo to drop approximately 30%

※2: Temperature Rise Current:DC current(A)that will cause an approximate △T of 40℃

※3: All test data is referenced to 25℃ ambient.Operating Temperature Range -55℃ to +125℃.

※4: The part temperature(ambient+temp rise)should not exceed 125℃ under worst case operating conditions. Circuit design,component placement,PWB trace size and thickness,airflow and other cooling provisions all affect the part temperature should be verified in the end application

ACDMR0520T SERIES

MECHANICAL DIMENSION :

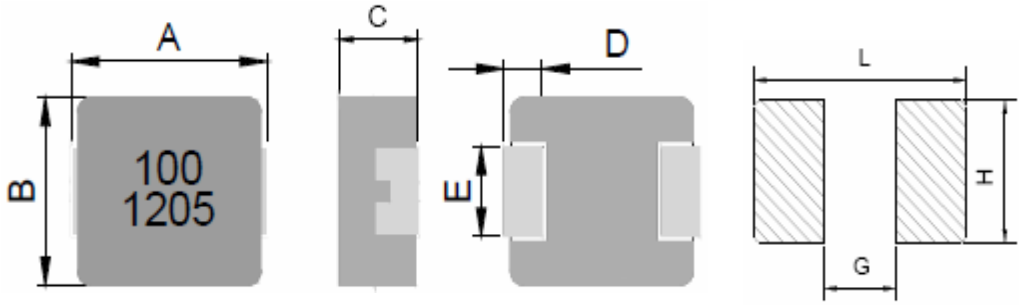

Series	A(mm)	B(mm)	C(mm)	D(mm)	E(mm)	L(mm)	G(mm)	H(mm)
ACDMR0520T	5.7±0.4	5.2±0.3	2.0 Max	1.1±0.3	2.5±0.3	6.2 Ref	2.2 Ref	2.8 Ref

ELECTRICAL CHARACTERISTICS: **RoHS**

Parts Number	Inductance (uH)	Test Freq. (Hz)	Isat(A) ※1	Irms(A) ※2	DCR (mΩ)	
			Typ	Typ	Max	Typ
ACDMR0520T-R22MT	0.22±20%	100K/1V	25.0	15.0	5.5	4
ACDMR0520T-R33MT	0.33±20%	100K/1V	21.3	12.0	7.3	6.3
ACDMR0520T-R47MT	0.47±20%	100K/1V	18.0	11.5	8.6	7.3
ACDMR0520T-R68MT	0.68±20%	100K/1V	12.8	10.0	12.4	11
ACDMR0520T-1R0MT	1.0±20%	100K/1V	13.7	7.0	20	17.5
ACDMR0520T-1R2MT	1.2±20%	100K/1V	11.0	6.2	28	23
ACDMR0520T-1R5MT	1.5±20%	100K/1V	9.8	5.5	30.5	26.5
ACDMR0520T-2R2MT	2.2±20%	100K/1V	9.0	4.2	50	42
ACDMR0520T-3R3MT	3.3±20%	100K/1V	7.3	3.3	76	66
ACDMR0520T-4R7MT	4.7±20%	100K/1V	5.0	2.8	116	103
ACDMR0520T-5R6MT	5.6±20%	100K/1V	4.0	2.5	122	112
ACDMR0520T-6R8MT	6.8±20%	100K/1V	3.8	2.4	150	130
ACDMR0520T-8R2MT	8.2±20%	100K/1V	3.5	2.3	171	148
ACDMR0520T-100MT	10±20%	100K/1V	3.4	2.3	199	180
ACDMR0520T-150MT	15±20%	100K/1V	2.8	1.9	270	240

REMARK :

※1: Saturation Rated Current:DC current(A)that will cause Lo to drop approximately 30%

※2: Temperature Rise Current:DC current(A)that will cause an approximate △T of 40℃

※3: All test data is referenced to 25℃ ambient.Operating Temperature Range -40℃ to +125℃.

※4: The part temperature(ambient+temp rise)should not exceed 125℃ under worst case operating conditions. Circuit design,component placement,PWB trace size and thickness,airflow and other cooling provisions all affect the part temperature should be verified in the end application

ACDMR0530M SERIES

MECHANICAL DIMENSION :

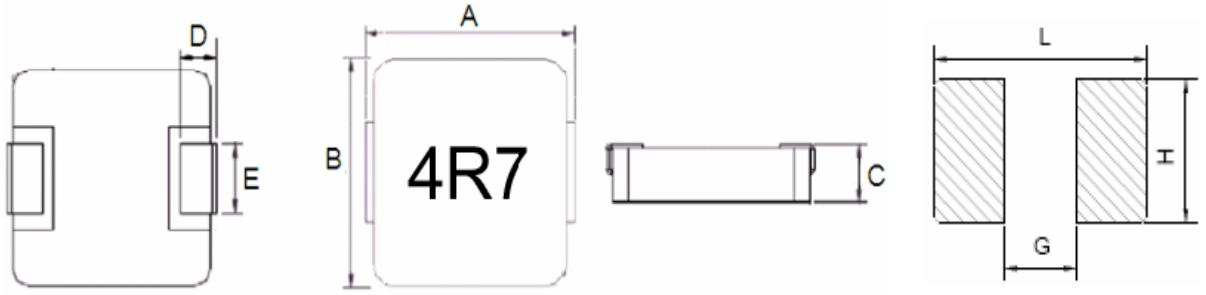

Series	A(mm)	B(mm)	C(mm)	D(mm)	E(mm)	L(mm)	G(mm)	H(mm)
ACDMR0530M	5.4±0.4	5.2±0.3	3.0 Max	1.2±0.2	2.2±0.3	6.0 Ref	2.2 Ref	2.5 Ref

ELECTRICAL CHARACTERISTICS: **RoHS**

Parts Number	Inductance (uH)	Test Freq. (Hz)	Isat(A) ※1	Irms(A) ※2	DCR (mΩ)	
			Typ	Typ	Max	Typ
ACDMR0530M-R10MT	0.1±20%	100K/1V	33	25	3	2.4
ACDMR0530M-R20MT	0.2±20%	100K/1V	14.5	14	3.9	3.5
ACDMR0530M-R33MT	0.33±20%	100K/1V	18	14	5.5	4.5
ACDMR0530M-R35MT	0.35±20%	100K/1V	18	14	5.5	4.5
ACDMR0530M-R47MT	0.47±20%	100K/1V	12	11	8.5	7.4
ACDMR0530M-R68MT	0.68±20%	100K/1V	11.5	9	12	11
ACDMR0530M-1R0MT	1.0±20%	100K/1V	11	8.5	14	13
ACDMR0530M-1R2MT	1.2±20%	100K/1V	11	8.5	16	15
ACDMR0530M-1R5MT	1.5±20%	100K/1V	8.5	8.2	25	20
ACDMR0530M-2R2MT	2.2±20%	100K/1V	7.5	7	29	25
ACDMR0530M-3R3MT	3.3±20%	100K/1V	6	5.5	38	32
ACDMR0530M-4R7MT	4.7±20%	100K/1V	5	4.5	60	50
ACDMR0530M-6R8MT	6.8±20%	100K/1V	4	3.5	90	75
ACDMR0530M-100MT	10±20%	100K/1V	3.5	3.2	125	110

REMARK :

※1: Saturation Rated Current:DC current(A)that will cause Lo to drop approximately 30%

※2: Temperature Rise Current:DC current(A)that will cause an approximate △T of 40℃

※3: All test data is referenced to 25℃ ambient.Operating Temperature Range -55℃ to +125℃.

※4: The part temperature(ambient+temp rise)should not exceed 125℃ under worst case operating conditions. Circuit design,component placement,PWB trace size and thickness,airflow and other cooling provisions all affect the part temperature should be verified in the end application

ACDMR0530AM SERIES

MECHANICAL DIMENSION :

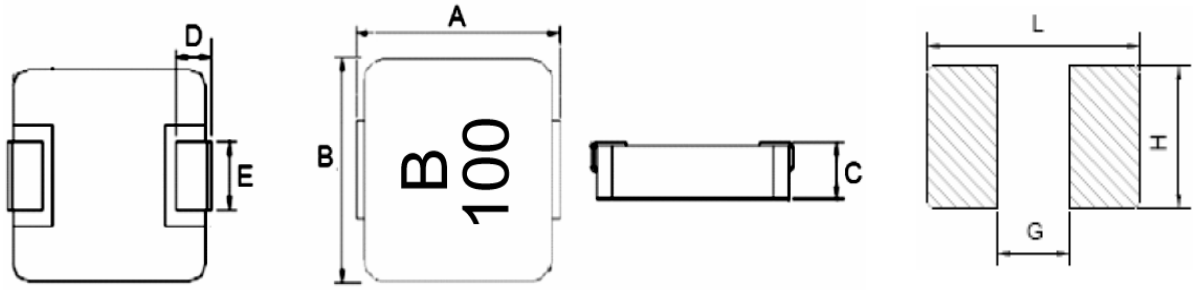

Series	A(mm)	B(mm)	C(mm)	D(mm)	E(mm)	L(mm)	G(mm)	H(mm)
ACDMR0530AM	5.4±0.4	5.2±0.3	3.0 Max	1.2±0.2	2.2±0.3	6.0 Ref	2.2 Ref	2.5 Ref

ELECTRICAL CHARACTERISTICS: **RoHS**

Parts Number	Inductance (uH)	Test Freq. (Hz)	Isat(A) ※1	Irms(A) ※2	DCR (mΩ)	
			Typ	Typ	Max	Typ
ACDMR0530AM-R82MT	0.82±20%	100K/1V	18.0	10.0	13	12
ACDMR0530AM-3R3MT	3.3±20%	100K/1V	6.5	5.5	38	32
ACDMR0530AM-100MT	10±20%	100K/1V	4.0	3.5	125	110

REMARK :

※1: Saturation Rated Current:DC current(A)that will cause Lo to drop approximately 30%

※2: Temperature Rise Current:DC current(A)that will cause an approximate △T of 40℃

※3: All test data is referenced to 25℃ ambient.Operating Temperature Range -55℃ to +125℃.

※4: The part temperature(ambient+temp rise)should not exceed 125℃ under worst case operating conditions. Circuit design,component placement,PWB trace size and thickness,airflow and other cooling provisions all affect the part temperature should be verified in the end application

ACDMR0530T SERIES

MECHANICAL DIMENSION :

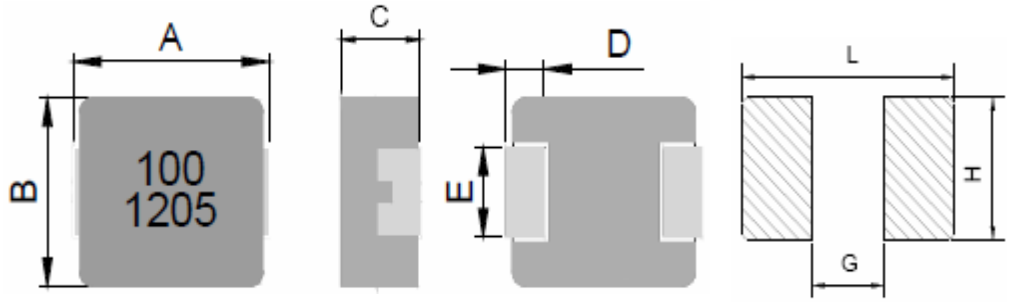

Series	A(mm)	B(mm)	C(mm)	D(mm)	E(mm)	L(mm)	G(mm)	H(mm)
ACDMR0530T	5.7±0.4	5.2±0.3	3.0 Max	1.1±0.3	1.5±0.2	6.5 Ref	2.5 Ref	1.8 Ref

ELECTRICAL CHARACTERISTICS: **RoHS**

Parts Number	Inductance (uH)	Test Freq. (Hz)	Isat(A) ※1	Irms(A) ※2	DCR (mΩ)	
			Typ	Typ	Max	Typ
ACDMR0530T-R15YT	0.15±30%	100K/1V	30	18	2.7	2.3
ACDMR0530T-R33MT	0.33±20%	100K/1V	18	14	5	4.3
ACDMR0530T-R47MT	0.47±20%	100K/1V	16	12	7.4	6.4
ACDMR0530T-R68MT	0.68±20%	100K/1V	14	8.5	12	10
ACDMR0530T-1R0MT	1.0±20%	100K/1V	11	7.0	14	13
ACDMR0530T-1R2MT	1.2±20%	100K/1V	11	6.5	16	14
ACDMR0530T-1R5MT	1.5±20%	100K/1V	10	6.0	25	16
ACDMR0530T-2R2MT	2.2±20%	100K/1V	9.0	5.5	35	25
ACDMR0530T-3R3MT	3.3±20%	100K/1V	8.0	5.0	38	32
ACDMR0530T-4R7MT	4.7±20%	100K/1V	6.0	4.6	53	50
ACDMR0530T-5R6MT	5.6±20%	100K/1V	4.5	4.25	63	55
ACDMR0530T-6R8MT	6.8±20%	100K/1V	4.3	4.0	76.2	68
ACDMR0530T-100MT	10±20%	100K/1V	3.5	2.75	128	110
ACDMR0530T-220MT	22±20%	100K/1V	1.7	1.9	250	220

REMARK :

※1: Saturation Rated Current:DC current(A)that will cause Lo to drop approximately 30%

※2: Temperature Rise Current:DC current(A)that will cause an approximate △T of 40℃

※3: All test data is referenced to 25℃ ambient.Operating Temperature Range -40℃ to +125℃.

※4: The part temperature(ambient+temp rise)should not exceed 125℃ under worst case operating conditions. Circuit design,component placement,PWB trace size and thickness,airflow and other cooling provisions all affect the part temperature should be verified in the end application

ACDMR0530AST SERIES

MECHANICAL DIMENSION :

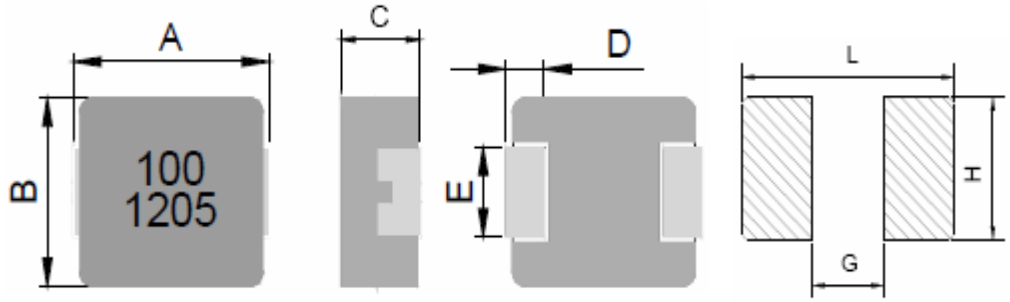

Series	A(mm)	B(mm)	C(mm)	D(mm)	E(mm)	L(mm)	G(mm)	H(mm)
ACDMR0530AST	5.7±0.4	5.2±0.3	3.0 Max	1.0±0.3	2.0±0.2	6.0 Ref	2.8 Ref	2.5 Ref

ELECTRICAL CHARACTERISTICS: **RoHS**

Parts Number	Inductance (uH)	Test Freq. (Hz)	Isat(A) ※1		Irms(A) ※2		DCR (mΩ)	
			Max	Typ	Max	Typ	Max	Typ
ACDMR0530AST-R47MT	0.47±20%	100K/1V	9	10	12	13.5	6	5.2
ACDMR0530AST-R68MT	0.68±20%	100K/1V	8	9	11	12.5	8.5	7.4
ACDMR0530AST-R82MT	0.82±20%	100K/1V	7.7	8.8	9	10	9.2	8
ACDMR0530AST-1R0MT	1.0±20%	100K/1V	7.5	8.5	8	9	12	10.5
ACDMR0530AST-3R3MT	3.3±20%	100K/1V	5.3	6	5.8	6.3	33	28
ACDMR0530AST-4R7MT	4.7±20%	100K/1V	4.6	5.3	4.8	5.5	44	38

REMARK :

※1: Saturation Rated Current:DC current(A)that will cause Lo to drop approximately 30%

※2: Temperature Rise Current:DC current(A)that will cause an approximate △T of 40℃

※3: All test data is referenced to 25℃ ambient.Operating Temperature Range -40℃ to +125℃.

※4: The part temperature(ambient+temp rise)should not exceed 125℃ under worst case operating conditions. Circuit design,component placement,PWB trace size and thickness,airflow and other cooling provisions all affect the part temperature should be verified in the end application

ACDMR0610Q SERIES

MECHANICAL DIMENSION :

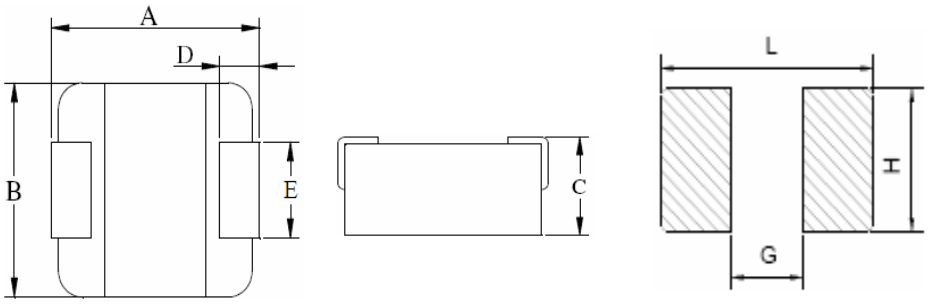

Series	A(mm)	B(mm)	C(mm)	D(mm)	E(mm)	L(mm)	G(mm)	H(mm)
ACDMR0610Q	6.1±0.4	6.1±0.4	1.0 Max	1.75±0.3	4.0±0.3	7.5 Ref	2.8 Ref	4.5 Ref

ELECTRICAL CHARACTERISTICS: **RoHS**

Parts Number	Inductance (uH)	Test Freq. (Hz)	Isat(A) ※1		Irms(A) ※2		DCR (mΩ)	
			Max	Typ	Max	Typ	Max	Typ
ACDMR0610Q-2R2MT	2.2±20%	100K/1V	4.3	4.8	2.8	3.2	102	85
ACDMR0610Q-4R7MT	4.7±20%	100K/1V	2.5	2.8	2.0	2.2	172	144
ACDMR0610Q-6R8MT	6.8±20%	100K/1V	2.2	2.5	1.8	2.0	197	164
ACDMR0610Q-100MT	10±20%	100K/1V	1.9	2.1	1.4	1.6	310	259

REMARK :

※1: Saturation Rated Current:DC current(A)that will cause Lo to drop approximately 30%

※2: Temperature Rise Current:DC current(A)that will cause an approximate △T of 40℃

※3: All test data is referenced to 25℃ ambient.Operating Temperature Range -55℃ to +125℃.

※4: The part temperature(ambient+temp rise)should not exceed 125℃ under worst case operating conditions. Circuit design,component placement,PWB trace size and thickness,airflow and other cooling provisions all affect the part temperature should be verified in the end application

ACDMR0612Q SERIES

MECHANICAL DIMENSION :

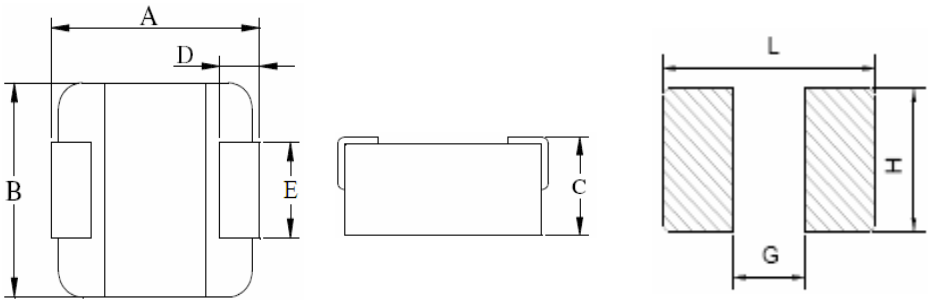

Series	A(mm)	B(mm)	C(mm)	D(mm)	E(mm)	L(mm)	G(mm)	H(mm)
ACDMR0612Q	6.1±0.4	6.1±0.4	1.2 Max	1.75±0.3	4.0±0.3	7.5 Ref	2.8 Ref	4.5 Ref

ELECTRICAL CHARACTERISTICS: **RoHS**

Parts Number	Inductance (uH)	Test Freq. (Hz)	Isat(A) ※1		Irms(A) ※2		DCR (mΩ)	
			Max	Typ	Max	Typ	Max	Typ
ACDMR0612Q-2R2MT	2.2±20%	100K/1V	3.7	4.1	5.0	6.0	59	47
ACDMR0612Q-4R7MT	4.7±20%	100K/1V	3.2	3.6	2.8	3.2	103	86
ACDMR0612Q-100MT	10±20%	100K/1V	2.5	2.8	1.9	2.1	230	192

REMARK :

※1: Saturation Rated Current:DC current(A)that will cause Lo to drop approximately 30%

※2: Temperature Rise Current:DC current(A)that will cause an approximate △T of 40℃

※3: All test data is referenced to 25℃ ambient.Operating Temperature Range -55℃ to +125℃.

※4: The part temperature(ambient+temp rise)should not exceed 125℃ under worst case operating conditions. Circuit design,component placement,PWB trace size and thickness,airflow and other cooling provisions all affect the part temperature should be verified in the end application

ACDMR0612AZ SERIES

MECHANICAL DIMENSION :

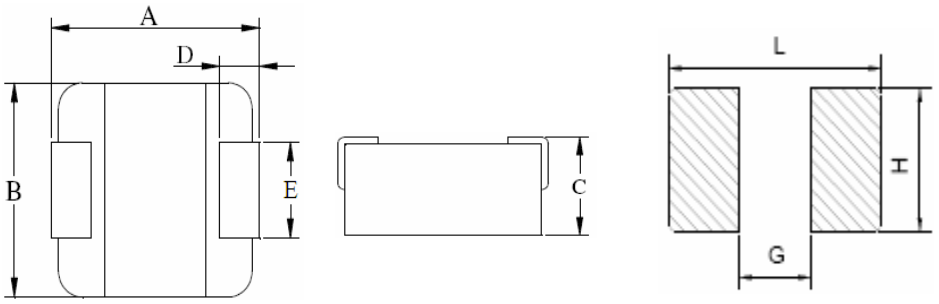

Series	A(mm)	B(mm)	C(mm)	D(mm)	E(mm)	L(mm)	G(mm)	H(mm)
ACDMR0612AZ	6.1±0.4	6.1±0.4	1.2 Max	1.75±0.3	4.0±0.3	7.5 Ref	2.8 Ref	4.5 Ref

ELECTRICAL CHARACTERISTICS: **RoHS**

Parts Number	Inductance (uH)	Test Freq. (Hz)	Isat(A) ※1		Irms(A) ※2		DCR (mΩ)	
			Max	Typ	Max	Typ	Max	Typ
ACDMR0612AZ-4R7MT	4.7±20%	100K/1V	4.5	5.0	3.0	3.2	103	86

REMARK :

※1: Saturation Rated Current:DC current(A)that will cause Lo to drop approximately 30%

※2: Temperature Rise Current:DC current(A)that will cause an approximate △T of 40℃

※3: All test data is referenced to 25℃ ambient.Operating Temperature Range -55℃ to +125℃.

※4: The part temperature(ambient+temp rise)should not exceed 125℃ under worst case operating conditions. Circuit design,component placement,PWB trace size and thickness,airflow and other cooling provisions all affect the part temperature should be verified in the end application

ACDMR0712T SERIES

MECHANICAL DIMENSION :

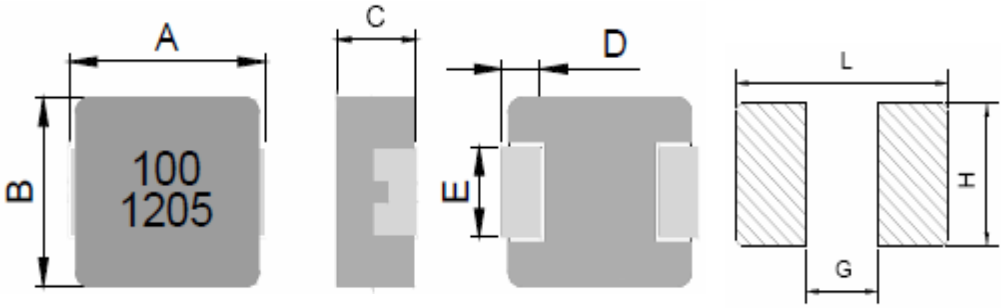

Series	A(mm)	B(mm)	C(mm)	D(mm)	E(mm)	L(mm)	G(mm)	H(mm)
ACDMR0712T	7.0±0.4	6.6±0.4	1.2 Max	1.8±0.3	2.5±0.3	7.7 Ref	2.5 Ref	3.0 Ref

ELECTRICAL CHARACTERISTICS: **RoHS**

Parts Number	Inductance (uH)	Test Freq. (Hz)	Isat(A) ※1	Irms(A) ※2	DCR (mΩ)	
			Typ	Typ	Max	Typ
ACDMR0712T-R10YT	0.1±30%	100K/1V	30	16	4	3.3
ACDMR0712T-R15YT	0.15±30%	100K/1V	24	14	5.7	4.9
ACDMR0712T-R22YT	0.22±30%	100K/1V	19	11	7.5	6.5
ACDMR0712T-R33MT	0.33±20%	100K/1V	16	9.5	10	9
ACDMR0712T-R47MT	0.47±20%	100K/1V	12	8.5	17	13
ACDMR0712T-R68MT	0.68±20%	100K/1V	9	7	19	17
ACDMR0712T-1R0MT	1.0±20%	100K/1V	7	6	30	27
ACDMR0712T-1R2MT	1.2±20%	100K/1V	6.8	5	36	31
ACDMR0712T-1R5MT	1.5±20%	100K/1V	6.5	4.5	40	35
ACDMR0712T-2R2MT	2.2±20%	100K/1V	5	4	61	53
ACDMR0712T-3R3MT	3.3±20%	100K/1V	4	3.2	103	90
ACDMR0712T-4R7MT	4.7±20%	100K/1V	3.8	2.5	150	130
ACDMR0712T-6R8MT	6.8±20%	100K/1V	3	2.1	198	172
ACDMR0712T-100MT	10±20%	100K/1V	2.5	1.8	290	280

REMARK :

※1: Saturation Rated Current:DC current(A)that will cause Lo to drop approximately 30%

※2: Temperature Rise Current:DC current(A)that will cause an approximate △T of 40℃

※3: All test data is referenced to 25℃ ambient.Operating Temperature Range -40℃ to +125℃.

※4: The part temperature(ambient+temp rise)should not exceed 125℃ under worst case operating conditions. Circuit design,component placement,PWB trace size and thickness,airflow and other cooling provisions all affect the part temperature should be verified in the end application

ACDMR0712AM SERIES

MECHANICAL DIMENSION :

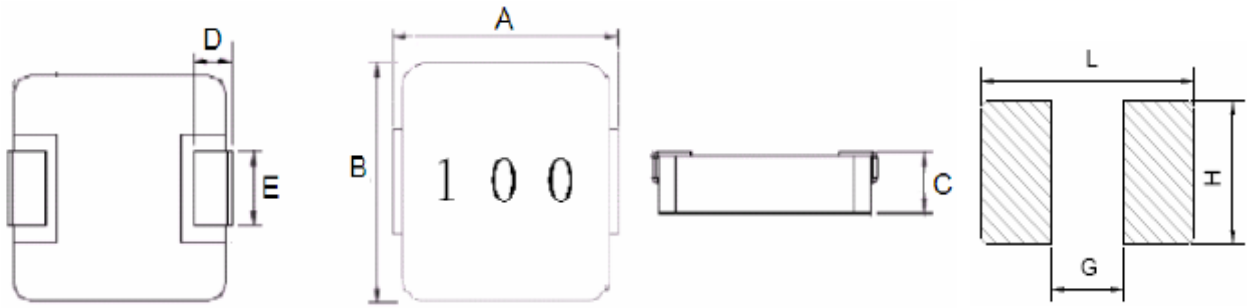

Series	A(mm)	B(mm)	C(mm)	D(mm)	E(mm)	L(mm)	G(mm)	H(mm)
ACDMR0712AM	7.0±0.4	6.6±0.3	1.2 Max	1.6±0.3	3.0±0.3	8.4 Ref	3.7 Ref	3.5 Ref

ELECTRICAL CHARACTERISTICS: **RoHS**

Parts Number	Inductance (uH)	Test Freq. (Hz)	Isat(A) ※1	Irms(A) ※2	DCR (mΩ)	
			Typ	Typ	Max	Typ
ACDMR0712AM-100MT	10±20%	100K/1V	3.1	2.0	290	220

REMARK :

※1: Saturation Rated Current:DC current(A)that will cause Lo to drop approximately 30%

※2: Temperature Rise Current:DC current(A)that will cause an approximate △T of 40℃

※3: All test data is referenced to 25℃ ambient.Operating Temperature Range -55℃ to +125℃.

※4: The part temperature(ambient+temp rise)should not exceed 125℃ under worst case operating conditions. Circuit design,component placement,PWB trace size and thickness,airflow and other cooling provisions all affect the part temperature should be verified in the end application

ACDMR0712AT SERIES

MECHANICAL DIMENSION :

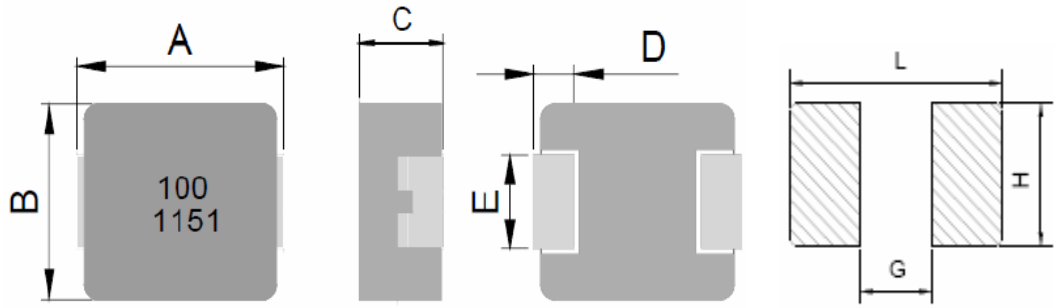

Series	A(mm)	B(mm)	C(mm)	D(mm)	E(mm)	L(mm)	G(mm)	H(mm)
ACDMR0712AT	7.0±0.4	6.5±0.4	1.2 Max	1.8±0.3	2.5±0.3	7.37 Ref	3.71 Ref	3.43 Ref

ELECTRICAL CHARACTERISTICS: **RoHS**

Parts Number	Inductance (uH)	Test Freq. (Hz)	Isat(A) ※1	Irms(A) ※2	DCR (mΩ)	
			Max	Max	Max	Typ
ACDMR0712AT-100MT	10±20%	100K/1V	3.5	2	288	240

REMARK :

※1: Saturation Rated Current:DC current(A)that will cause Lo to drop approximately 30%

※2: Temperature Rise Current:DC current(A)that will cause an approximate △T of 40℃

※3: All test data is referenced to 25℃ ambient.Operating Temperature Range -55℃ to +125℃.

※4: The part temperature(ambient+temp rise)should not exceed 125℃ under worst case operating conditions. Circuit design,component placement,PWB trace size and thickness,airflow and other cooling provisions all affect the part temperature should be verified in the end application

ACDMR0715T SERIES

MECHANICAL DIMENSION :

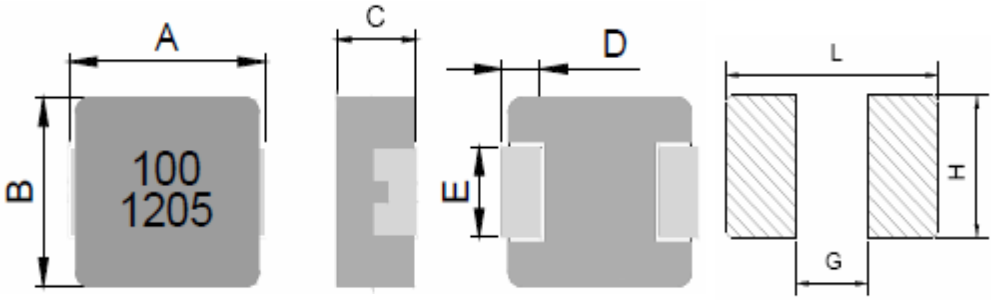

Series	A(mm)	B(mm)	C(mm)	D(mm)	E(mm)	L(mm)	G(mm)	H(mm)
ACDMR0715T	7.0±0.4	6.6±0.4	1.5 Max	1.8±0.3	3.0±0.3	7.7 Ref	2.5 Ref	3.5 Ref

ELECTRICAL CHARACTERISTICS: **RoHS**

Parts Number	Inductance (uH)	Test Freq. (Hz)	Isat(A) ※1	Irms(A) ※2	DCR (mΩ)	
			Typ	Typ	Max	Typ
ACDMR0715T-R22YT	0.22±30%	100K/1V	22	14	5.2	4.3
ACDMR0715T-R33MT	0.33±20%	100K/1V	18	11	7.6	6.6
ACDMR0715T-R47MT	0.47±20%	100K/1V	16	9.5	10.3	9
ACDMR0715T-R68MT	0.68±20%	100K/1V	15	7.5	15.2	13.8
ACDMR0715T-1R0MT	1.0±20%	100K/1V	12	6.5	25.8	23
ACDMR0715T-1R2MT	1.2±20%	100K/1V	10.5	5.6	34	29
ACDMR0715T-1R5MT	1.5±20%	100K/1V	9.5	5.0	42.5	37
ACDMR0715T-2R2MT	2.2±20%	100K/1V	6.5	4.5	55	48
ACDMR0715T-3R3MT	3.3±20%	100K/1V	6.0	4.2	74	62
ACDMR0715T-4R7MT	4.7±20%	100K/1V	5.0	3.8	111	96
ACDMR0715T-5R6MT	5.6±20%	100K/1V	4.5	3.0	138	115
ACDMR0715T-6R8MT	6.8±20%	100K/1V	3.5	2.6	148	128
ACDMR0715T-8R2MT	8.2±20%	100K/1V	3.2	2.4	184	153
ACDMR0715T-100MT	10±20%	100K/1V	2.8	2.3	216	180
ACDMR0715T-220MT	22±20%	100K/1V	2.5	1.5	504	420

REMARK :

※1: Saturation Rated Current:DC current(A)that will cause Lo to drop approximately 30%

※2: Temperature Rise Current:DC current(A)that will cause an approximate △T of 40℃

※3: All test data is referenced to 25℃ ambient.Operating Temperature Range -40℃ to +125℃.

※4: The part temperature(ambient+temp rise)should not exceed 125℃ under worst case operating conditions. Circuit design,component placement,PWB trace size and thickness,airflow and other cooling provisions all affect the part temperature should be verified in the end application

ACDMR0718M SERIES

MECHANICAL DIMENSION :

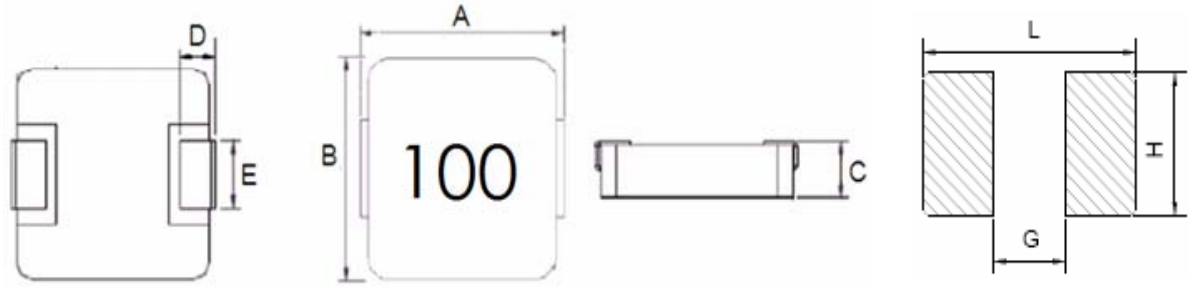

Series	A(mm)	B(mm)	C(mm)	D(mm)	E(mm)	L(mm)	G(mm)	H(mm)
ACDMR0718M	7.0±0.4	6.6±0.3	1.8 Max	1.6±0.3	3.0±0.3	8.4 Ref	3.7 Ref	3.5 Ref

ELECTRICAL CHARACTERISTICS: **RoHS**

Parts Number	Inductance (uH)	Test Freq. (Hz)	Isat(A) ※1	Irms(A) ※2	DCR (mΩ)	
			Typ	Typ	Max	Typ
ACDMR0718M-R10MT	0.1±20%	100K/1V	38	25	2.3	2
ACDMR0718M-R12MT	0.12±20%	100K/1V	24	22	3.5	3
ACDMR0718M-R47MT	0.47±20%	100K/1V	18	11.5	8.4	8
ACDMR0718M-R68MT	0.68±20%	100K/1V	17	9.5	12	10
ACDMR0718M-1R0MT	1.0±20%	100K/1V	14	8.5	16	13
ACDMR0718M-1R5MT	1.5±20%	100K/1V	9.2	8.0	26	20
ACDMR0718M-2R2MT	2.2±20%	100K/1V	8.0	7.0	35	28
ACDMR0718M-3R3MT	3.3±20%	100K/1V	6.5	4.5	50	43
ACDMR0718M-4R7MT	4.7±20%	100K/1V	5.0	4.0	62	56
ACDMR0718M-6R8MT	6.8±20%	100K/1V	4.5	3.0	110	101
ACDMR0718M-100MT	10±20%	100K/1V	2.5	2.3	155	140
ACDMR0718M-220MT	22±20%	100K/1V	2.3	1.8	350	310

REMARK :

※1: Saturation Rated Current:DC current(A)that will cause Lo to drop approximately 30%

※2: Temperature Rise Current:DC current(A)that will cause an approximate △T of 40℃

※3: All test data is referenced to 25℃ ambient.Operating Temperature Range -55℃ to +125℃.

※4: The part temperature(ambient+temp rise)should not exceed 125℃ under worst case operating conditions. Circuit design,component placement,PWB trace size and thickness,airflow and other cooling provisions all affect the part temperature should be verified in the end application

ACDMR0718T SERIES

MECHANICAL DIMENSION :

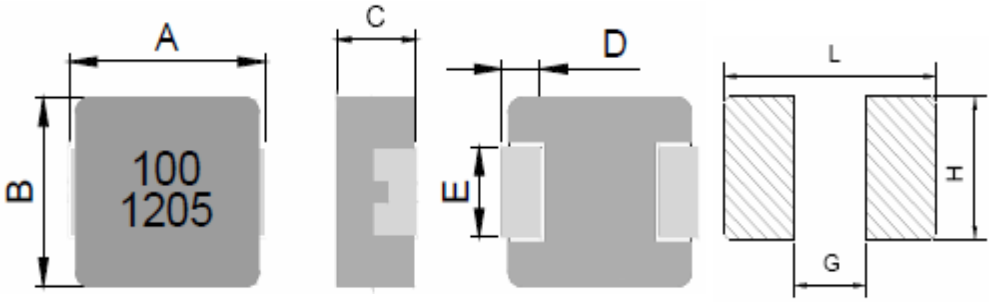

Series	A(mm)	B(mm)	C(mm)	D(mm)	E(mm)	L(mm)	G(mm)	H(mm)
ACDMR0718T	7.0±0.4	6.6±0.4	1.8 Max	1.8±0.3	3.0±0.3	7.7 Ref	2.5 Ref	3.5 Ref

ELECTRICAL CHARACTERISTICS: **RoHS**

Parts Number	Inductance (uH)	Test Freq. (Hz)	Isat(A) ※1	Irms(A) ※2	DCR (mΩ)	
			Typ	Typ	Max	Typ
ACDMR0718T-R22MT	0.22±20%	100K/1V	26	16	3	2.5
ACDMR0718T-R33MT	0.33±20%	100K/1V	22	14	5.8	4.8
ACDMR0718T-R47MT	0.47±20%	100K/1V	18	12	7.4	6.4
ACDMR0718T-R68MT	0.68±20%	100K/1V	17	10	11	9.5
ACDMR0718T-R82MT	0.82±20%	100K/1V	15.5	8.5	14	11.5
ACDMR0718T-1R0MT	1.0±20%	100K/1V	14	7.0	17	14.5
ACDMR0718T-1R2MT	1.2±20%	100K/1V	13.5	6.5	24	20
ACDMR0718T-1R5MT	1.5±20%	100K/1V	13	6.0	25.2	21
ACDMR0718T-2R2MT	2.2±20%	100K/1V	11	6.0	35	31
ACDMR0718T-3R3MT	3.3±20%	100K/1V	9.0	5.0	46	40
ACDMR0718T-4R7MT	4.7±20%	100K/1V	7.0	4.0	76	68
ACDMR0718T-5R6MT	5.6±20%	100K/1V	6.0	3.5	86	78
ACDMR0718T-6R8MT	6.8±20%	100K/1V	5.5	3.0	104	93
ACDMR0718T-8R2MT	8.2±20%	100K/1V	4.5	2.6	140	123
ACDMR0718T-100MT	10±20%	100K/1V	3.5	2.3	160	143
ACDMR0718T-220MT	22±20%	100K/1V	2.5	1.8	360	300
ACDMR0718T-330MT	33±20%	100K/1V	2.1	1.3	650	550

REMARK :

※1: Saturation Rated Current:DC current(A)that will cause Lo to drop approximately 30%

※2: Temperature Rise Current:DC current(A)that will cause an approximate △T of 40℃

※3: All test data is referenced to 25℃ ambient.Operating Temperature Range -40℃ to +125℃.

※4: The part temperature(ambient+temp rise)should not exceed 125℃ under worst case operating conditions. Circuit design,component placement,PWB trace size and thickness,airflow and other cooling provisions all affect the part temperature should be verified in the end application

ACDMR0720T SERIES

MECHANICAL DIMENSION :

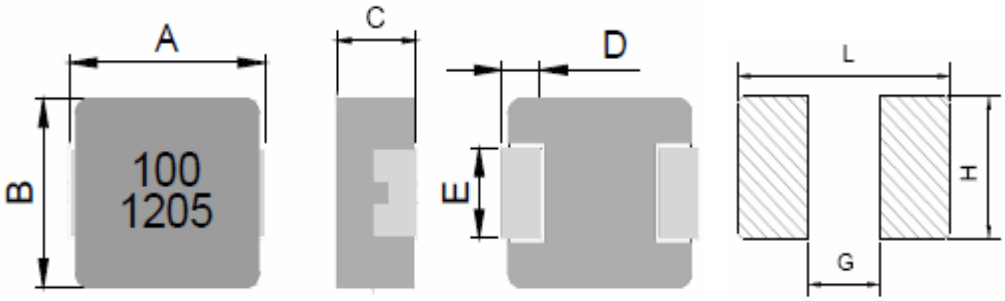

Series	A(mm)	B(mm)	C(mm)	D(mm)	E(mm)	L(mm)	G(mm)	H(mm)
ACDMR0720T	7.0±0.4	6.6±0.4	2.0 Max	1.8±0.3	3.0±0.3	7.7 Ref	2.5 Ref	3.5 Ref

ELECTRICAL CHARACTERISTICS: **RoHS**

Parts Number	Inductance (uH)	Test Freq. (Hz)	Isat(A) ※1	Irms(A) ※2	DCR (mΩ)	
			Typ	Typ	Max	Typ
ACDMR0720T-R10YT	0.1±30%	100K/1V	40	21	2.4	2
ACDMR0720T-R15YT	0.15±30%	100K/1V	39	18	2.7	2.3
ACDMR0720T-R16YT	0.16±30%	100K/1V	38	18	2.7	2.3
ACDMR0720T-R18YT	0.18±30%	100K/1V	36	18	2.9	2.4
ACDMR0720T-R20YT	0.2±30%	100K/1V	35	18	3	2.5
ACDMR0720T-R22YT	0.22±30%	100K/1V	32	15	4	3.5
ACDMR0720T-R33MT	0.33±20%	100K/1V	25	14	5	4.5
ACDMR0720T-R47MT	0.47±20%	100K/1V	20	11.7	8.3	7.1
ACDMR0720T-R56MT	0.56±20%	100K/1V	18	11	9.3	7.9
ACDMR0720T-R68MT	0.68±20%	100K/1V	16	10.5	10	8.3
ACDMR0720T-1R0MT	1.0±20%	100K/1V	14	8	18	16.5
ACDMR0720T-1R2MT	1.2±20%	100K/1V	13	7.5	23	19
ACDMR0720T-1R5MT	1.5±20%	100K/1V	12	7	27	23
ACDMR0720T-2R2MT	2.2±20%	100K/1V	10	6	37	32
ACDMR0720T-3R3MT	3.3±20%	100K/1V	8	5	48	43
ACDMR0720T-4R7MT	4.7±20%	100K/1V	7	4.5	60	53
ACDMR0720T-5R6MT	5.6±20%	100K/1V	6	4	68	59
ACDMR0720T-6R8MT	6.8±20%	100K/1V	5.5	4	73	63
ACDMR0720T-8R2MT	8.2±20%	100K/1V	5	3.2	116	101
ACDMR0720T-100MT	10±20%	100K/1V	4	2.8	154	134
ACDMR0720T-150MT	15±20%	100K/1V	3.3	2.1	210	190
ACDMR0720T-220MT	22±20%	100K/1V	2.5	1.5	280	236

REMARK :

※1: Saturation Rated Current:DC current(A)that will cause Lo to drop approximately 30%

※2: Temperature Rise Current:DC current(A)that will cause an approximate △T of 40℃

※3: All test data is referenced to 25℃ ambient.Operating Temperature Range -40℃ to +125℃.

※4: The part temperature(ambient+temp rise)should not exceed 125℃ under worst case operating conditions. Circuit design,component placement,PWB trace size and thickness,airflow and other cooling provisions all affect the part temperature should be verified in the end application

ACDMR0724M SERIES

MECHANICAL DIMENSION :

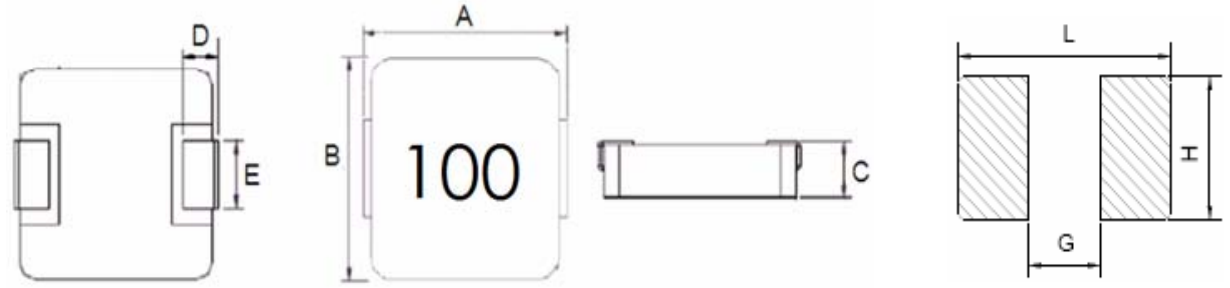

Series	A(mm)	B(mm)	C(mm)	D(mm)	E(mm)	L(mm)	G(mm)	H(mm)
ACDMR0724M	7.0±0.4	6.6±0.3	2.4 Max	1.6±0.3	3.0±0.3	8.4 Ref	3.7 Ref	3.5 Ref

ELECTRICAL CHARACTERISTICS: **RoHS**

Parts Number	Inductance (uH)	Test Freq. (Hz)	Isat(A) ※1	Irms(A) ※2	DCR (mΩ)	
			Typ	Typ	Max	Typ
ACDMR0724M-R22MT	0.22±20%	100K/1V	34	21	3	2.5
ACDMR0724M-R33MT	0.33±20%	100K/1V	24.5	18	4.1	3.5
ACDMR0724M-R47MT	0.47±20%	100K/1V	22	15	5.1	4.5
ACDMR0724M-R56MT	0.56±20%	100K/1V	17	13	6.5	5.5
ACDMR0724M-R68MT	0.68±20%	100K/1V	16	12	7	6.2
ACDMR0724M-1R0MT	1.0±20%	100K/1V	16	9	13.5	11
ACDMR0724M-1R5MT	1.5±20%	100K/1V	13.5	9	20	17
ACDMR0724M-2R2MT	2.2±20%	100K/1V	11	7	28	23
ACDMR0724M-3R3MT	3.3±20%	100K/1V	8.5	5.5	39	31
ACDMR0724M-4R7MT	4.7±20%	100K/1V	7.5	5	54	45
ACDMR0724M-6R8MT	6.8±20%	100K/1V	6	4	70	57
ACDMR0724M-100MT	10±20%	100K/1V	4	3.1	101	92
ACDMR0724M-150MT	15±20%	100K/1V	3.3	2.5	160	145
ACDMR0724M-220MT	22±20%	100K/1V	2.5	2	230	220

REMARK :

※1: Saturation Rated Current:DC current(A)that will cause Lo to drop approximately 30%

※2: Temperature Rise Current:DC current(A)that will cause an approximate △T of 40℃

※3: All test data is referenced to 25℃ ambient.Operating Temperature Range -55℃ to +125℃.

※4: The part temperature(ambient+temp rise)should not exceed 125℃ under worst case operating conditions. Circuit design,component placement,PWB trace size and thickness,airflow and other cooling provisions all affect the part temperature should be verified in the end application

ACDMR0724T SERIES

MECHANICAL DIMENSION :

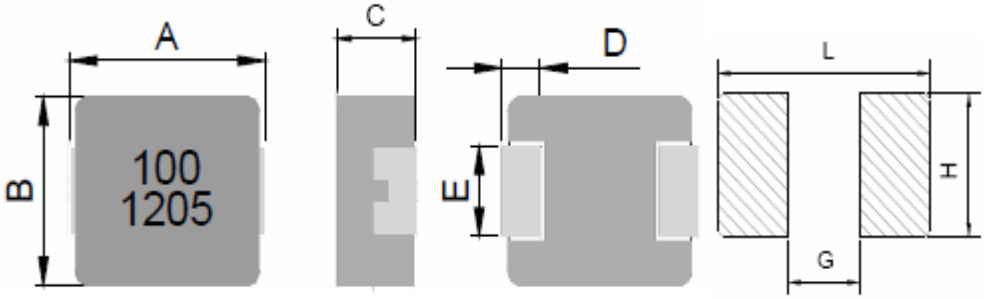

Series	A(mm)	B(mm)	C(mm)	D(mm)	E(mm)	L(mm)	G(mm)	H(mm)
ACDMR0724T	7.3±0.4	6.6±0.4	2.4 Max	1.8±0.3	3.0±0.3	7.7 Ref	2.5 Ref	3.5 Ref

ELECTRICAL CHARACTERISTICS:

RoHS

Parts Number	Inductance (uH)	Test Freq. (Hz)	Isat(A) ※1	Irms(A) ※2	DCR (mΩ)	
			Typ	Typ	Max	Typ
ACDMR0724T-R22MT	0.22±20%	100K/1V	34	21	3.2	2.0
ACDMR0724T-R33MT	0.33±20%	100K/1V	30	18	4.4	3.6
ACDMR0724T-R47MT	0.47±20%	100K/1V	26	15	5.1	4.8
ACDMR0724T-R56MT	0.56±20%	100K/1V	24	13	6.5	5.5
ACDMR0724T-R68MT	0.68±20%	100K/1V	21	13	7.2	6.4
ACDMR0724T-R82MT	0.82±20%	100K/1V	17	11	9.5	8.0
ACDMR0724T-1R0MT	1.0±20%	100K/1V	16	11	13.5	10.5
ACDMR0724T-1R5MT	1.5±20%	100K/1V	15	9.0	20	17
ACDMR0724T-2R2MT	2.2±20%	100K/1V	14	7.0	28	23
ACDMR0724T-3R3MT	3.3±20%	100K/1V	10	6.0	39	34
ACDMR0724T-4R7MT	4.7±20%	100K/1V	9.0	5.5	50	41
ACDMR0724T-5R6MT	5.6±20%	100K/1V	8.0	5.0	62	56
ACDMR0724T-6R8MT	6.8±20%	100K/1V	7.0	4.0	72	65
ACDMR0724T-100MT	10±20%	100K/1V	5.0	3.2	101	92

REMARK :

※1: Saturation Rated Current:DC current(A)that will cause Lo to drop approximately 30%

※2: Temperature Rise Current:DC current(A)that will cause an approximate △T of 40℃

※3: All test data is referenced to 25℃ ambient.Operating Temperature Range -40℃ to +125℃.

※4: The part temperature(ambient+temp rise)should not exceed 125℃ under worst case operating conditions. Circuit design,component placement,PWB trace size and thickness,airflow and other cooling provisions all affect the part temperature should be verified in the end application

ACDMR0730M SERIES

MECHANICAL DIMENSION :

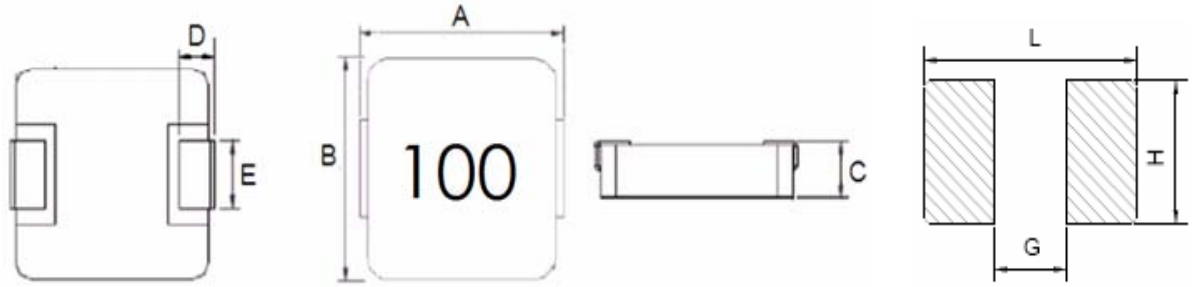

Series	A(mm)	B(mm)	C(mm)	D(mm)	E(mm)	L(mm)	G(mm)	H(mm)
ACDMR0730M	7.0±0.4	6.6±0.3	3.0 Max	1.6±0.3	3.0±0.3	8.4 Ref	3.7 Ref	3.5 Ref

ELECTRICAL CHARACTERISTICS: **RoHS**

Parts Number	Inductance (uH)	Test Freq. (Hz)	Isat(A) ※1	Irms(A) ※2	DCR (mΩ)	
			Typ	Typ	Max	Typ
ACDMR0730M-R10MT	0.1±20%	100K/1V	56	32	1.2	0.9
ACDMR0730M-R22MT	0.22±20%	100K/1V	34	24	3	2.5
ACDMR0730M-R24MT	0.24±20%	100K/1V	26	23	3.1	2.6
ACDMR0730M-R33MT	0.33±20%	100K/1V	25	21	3.5	3
ACDMR0730M-R47MT	0.47±20%	100K/1V	20	18	4.1	3.5
ACDMR0730M-R56MT	0.56±20%	100K/1V	18	16.5	4.5	3.9
ACDMR0730M-R68MT	0.68±20%	100K/1V	17	16	5.3	4.8
ACDMR0730M-R82MT	0.82±20%	100K/1V	16	14	6	5.4
ACDMR0730M-1R0MT	1.0±20%	100K/1V	15	12	7.4	6.7
ACDMR0730M-1R5MT	1.5±20%	100K/1V	14	12	12.1	10.6
ACDMR0730M-2R2MT	2.2±20%	100K/1V	10	9.5	15	13.5
ACDMR0730M-3R3MT	3.3±20%	100K/1V	9.5	8.5	22	18
ACDMR0730M-4R7MT	4.7±20%	100K/1V	6.5	6	33	28
ACDMR0730M-5R6MT	5.6±20%	100K/1V	6	5	42	37
ACDMR0730M-6R8MT	6.8±20%	100K/1V	6	5	48	42.5
ACDMR0730M-8R2MT	8.2±20%	100K/1V	6	5	60	54
ACDMR0730M-100MT	10±20%	100K/1V	5.5	4.5	67	62
ACDMR0730M-150MT	15±20%	100K/1V	4.5	3	115	104
ACDMR0730M-220MT	22±20%	100K/1V	3	2.3	200	180
ACDMR0730M-330MT	33±20%	100K/1V	2.5	2	310	280

REMARK :

※1: Saturation Rated Current:DC current(A)that will cause Lo to drop approximately 30%

※2: Temperature Rise Current:DC current(A)that will cause an approximate △T of 40℃

※3: All test data is referenced to 25℃ ambient.Operating Temperature Range -55℃ to +125℃.

※4: The part temperature(ambient+temp rise)should not exceed 125℃ under worst case operating conditions. Circuit design,component placement,PWB trace size and thickness,airflow and other cooling provisions all affect the part temperature should be verified in the end application

ACDMR0730CM SERIES

MECHANICAL DIMENSION :

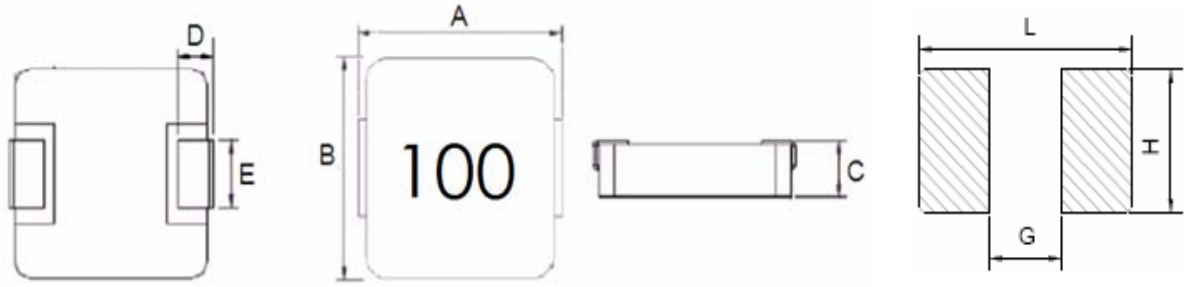

Series	A(mm)	B(mm)	C(mm)	D(mm)	E(mm)	L(mm)	G(mm)	H(mm)
ACDMR0730CM	7.0±0.4	6.6±0.3	3.0 Max	1.6±0.3	3.0±0.3	8.4 Ref	3.7 Ref	3.5 Ref

ELECTRICAL CHARACTERISTICS: **RoHS**

Parts Number	Inductance (uH)	Test Freq. (Hz)	Isat(A) ※1	Irms(A) ※2	DCR (mΩ)	
			Typ	Typ	Max	Typ
ACDMR0730CM-R10MT	0.1±20%	100K/1V	60	32.5	1.7	1.5
ACDMR0730CM-R15MT	0.15±20%	100K/1V	52	30	2	1.7
ACDMR0730CM-R20MT	0.2±20%	100K/1V	41	24	3	2.4
ACDMR0730CM-R22MT	0.22±20%	100K/1V	40	23	2.8	2.5
ACDMR0730CM-R33MT	0.33±20%	100K/1V	30	20	3.9	3.5
ACDMR0730CM-R47MT	0.47±20%	100K/1V	26	17.5	4.2	4
ACDMR0730CM-R56MT	0.56±20%	100K/1V	25.5	16.5	5	4.7
ACDMR0730CM-R68MT	0.68±20%	100K/1V	25	15.5	5.5	5
ACDMR0730CM-R75MT	0.75±20%	100K/1V	24.5	14	6.2	5.4
ACDMR0730CM-R82MT	0.82±20%	100K/1V	24	13	8	6.7
ACDMR0730CM-1R0MT	1.0±20%	100K/1V	22	11	10	9
ACDMR0730CM-1R2MT	1.2±20%	100K/1V	20	10	12	10
ACDMR0730CM-1R5MT	1.5±20%	100K/1V	18	9	15	14
ACDMR0730CM-2R0MT	2.0±20%	100K/1V	14	8.2	18	16
ACDMR0730CM-2R2MT	2.2±20%	100K/1V	14	8	20	18
ACDMR0730CM-2R5MT	2.5±20%	100K/1V	14	7	22	20
ACDMR0730CM-3R3MT	3.3±20%	100K/1V	13.5	6	30	28
ACDMR0730CM-4R7MT	4.7±20%	100K/1V	10	5.5	40	37
ACDMR0730CM-6R8MT	6.8±20%	100K/1V	8	4.5	60	54

REMARK :

※1: Saturation Rated Current:DC current(A)that will cause Lo to drop approximately 30%

※2: Temperature Rise Current:DC current(A)that will cause an approximate △T of 40℃

※3: All test data is referenced to 25℃ ambient.Operating Temperature Range -55℃ to +125℃.

※4: The part temperature(ambient+temp rise)should not exceed 125℃ under worst case operating conditions. Circuit design,component placement,PWB trace size and thickness,airflow and other cooling provisions all affect the part temperature should be verified in the end application

ACDMR0730T SERIES

MECHANICAL DIMENSION :

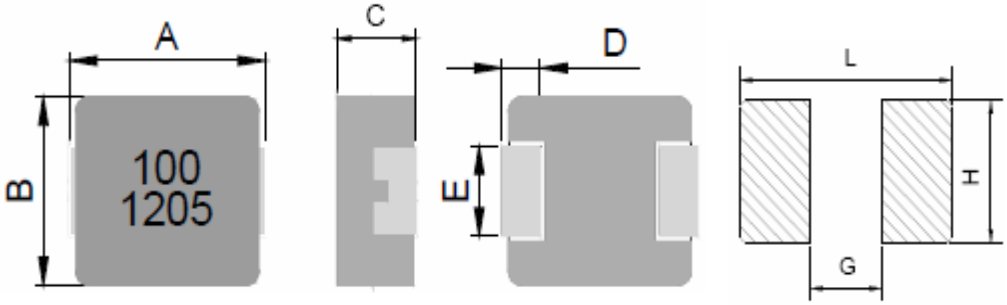

Series	A(mm)	B(mm)	C(mm)	D(mm)	E(mm)	L(mm)	G(mm)	H(mm)
ACDMR0730T	7.3±0.4	6.6±0.4	3.0 Max	1.8±0.3	3.0±0.3	8.4 Ref	2.5 Ref	3.5 Ref

ELECTRICAL CHARACTERISTICS: **RoHS**

Parts Number	Inductance (uH)	Test Freq. (Hz)	Isat(A) ※1	Irms(A) ※2	DCR (mΩ)	
			Typ	Typ	Max	Typ
ACDMR0730T-R10YT	0.1±30%	100K/1V	60	32.5	1.7	1.2
ACDMR0730T-R22YT	0.22±30%	100K/1V	40	23	2.8	2.1
ACDMR0730T-R33MT	0.33±30%	100K/1V	32	20	3.9	3.5
ACDMR0730T-R47MT	0.47±20%	100K/1V	26	17.5	4.2	4.0
ACDMR0730T-R56MT	0.56±20%	100K/1V	25.5	16.5	5.0	4.7
ACDMR0730T-R68MT	0.68±20%	100K/1V	25	15.5	5.5	4.8
ACDMR0730T-R75MT	0.75±20%	100K/1V	24.5	14.5	6.6	5.5
ACDMR0730T-R82MT	0.82±20%	100K/1V	24	13	8.0	6.7
ACDMR0730T-1R0MT	1.0±20%	100K/1V	22	11	10	8.3
ACDMR0730T-1R5MT	1.5±20%	100K/1V	18	9.0	15	13
ACDMR0730T-1R8MT	1.8±20%	100K/1V	16	8.5	17	14
ACDMR0730T-2R2MT	2.2±20%	100K/1V	14	8.0	20	18
ACDMR0730T-2R5MT	2.5±20%	100K/1V	13	7.0	22	20
ACDMR0730T-3R3MT	3.3±20%	100K/1V	13.5	6.0	30	28
ACDMR0730T-4R7MT	4.7±20%	100K/1V	10	5.5	40	37
ACDMR0730T-5R6MT	5.6±20%	100K/1V	9.0	5.0	48	43
ACDMR0730T-6R8MT	6.8±20%	100K/1V	8.0	4.5	60	54
ACDMR0730T-8R2MT	8.2±20%	100K/1V	7.5	4.0	68	64
ACDMR0730T-100MT	10±20%	100K/1V	6.0	3.5	85	75
ACDMR0730T-220MT	22±20%	100K/1V	3.5	2.0	190	165

REMARK :

※1: Saturation Rated Current:DC current(A)that will cause Lo to drop approximately 30%

※2: Temperature Rise Current:DC current(A)that will cause an approximate △T of 40℃

※3: All test data is referenced to 25℃ ambient.Operating Temperature Range -40℃ to +125℃.

※4: The part temperature(ambient+temp rise)should not exceed 125℃ under worst case operating conditions. Circuit design,component placement,PWB trace size and thickness,airflow and other cooling provisions all affect the part temperature should be verified in the end application

ACDMR0730PW SERIES

MECHANICAL DIMENSION :

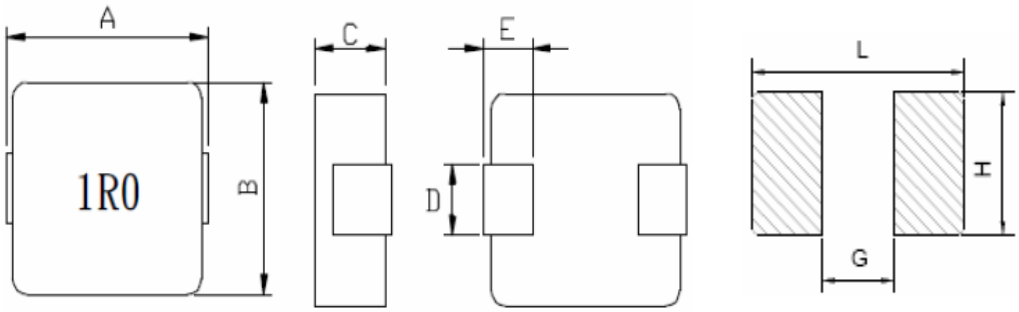

Series	A(mm)	B(mm)	C(mm)	D(mm)	E(mm)	L(mm)	G(mm)	H(mm)
ACDMR0730PW	7.7 Max	6.6±0.3	3.0 Max	3.0±0.2	1.6±0.3	7.5 Ref	2.5 Ref	3.5 Ref

ELECTRICAL CHARACTERISTICS: **RoHS**

Parts Number	Inductance (uH)	Test Freq. (Hz)	Isat(A) ※1	Irms(A) ※2	DCR (mΩ)
			Typ	Typ	Max
ACDMR0730PW-6R8MT	6.8±20%	100K/1V	6.0	4.5	48
ACDMR0730PW-100MT	10±20%	100K/1V	5.5	4.5	67

REMARK :

※1: Saturation Rated Current:DC current(A)that will cause Lo to drop approximately 30%

※2: Temperature Rise Current:DC current(A)that will cause an approximate △T of 40℃

※3: All test data is referenced to 25℃ ambient.Operating Temperature Range -55℃ to +125℃.

※4: The part temperature(ambient+temp rise)should not exceed 125℃ under worst case operating conditions. Circuit design,component placement,PWB trace size and thickness,airflow and other cooling provisions all affect the part temperature should be verified in the end application

ACDMR0740T SERIES

MECHANICAL DIMENSION :

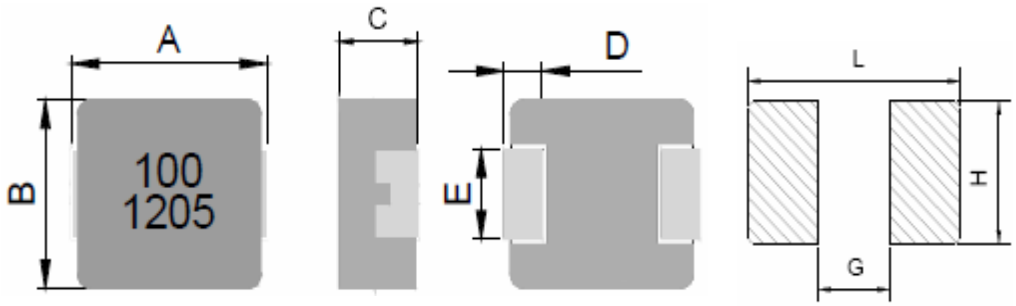

Series	A(mm)	B(mm)	C(mm)	D(mm)	E(mm)	L(mm)	G(mm)	H(mm)
ACDMR0740T	7.3±0.4	6.6±0.4	4.0 Max	1.8±0.3	3.0±0.3	8.4 Ref	2.5 Ref	3.5 Ref

ELECTRICAL CHARACTERISTICS: **RoHS**

Parts Number	Inductance (uH)	Test Freq. (Hz)	Isat(A) ※1	Irms(A) ※2	DCR (mΩ)	
			Typ	Typ	Max	Typ
ACDMR0740T-R12YT	0.12±30%	100K/1V	64	32	1	0.7
ACDMR0740T-R15YT	0.15±30%	100K/1V	55	30	1.2	0.9
ACDMR0740T-R22MT	0.22±20%	100K/1V	34	25	2.1	1.85
ACDMR0740T-R33MT	0.33±20%	100K/1V	34	25	2.6	2
ACDMR0740T-R36MT	0.36±20%	100K/1V	31	25	3.1	2.7
ACDMR0740T-R47MT	0.47±20%	100K/1V	28	23	3.4	3
ACDMR0740T-R56MT	0.56±20%	100K/1V	26	20	4.3	3.8
ACDMR0740T-R68MT	0.68±20%	100K/1V	24	16	4.5	4.1
ACDMR0740T-1R0MT	1.0±20%	100K/1V	22	14	8	6.8
ACDMR0740T-1R5MT	1.5±20%	100K/1V	20	12	12	10
ACDMR0740T-2R2MT	2.2±20%	100K/1V	14	9	14	11.5
ACDMR0740T-3R3MT	3.3±20%	100K/1V	12	8	27	24
ACDMR0740T-4R7MT	4.7±20%	100K/1V	11	6	32.5	28
ACDMR0740T-5R6MT	5.6±20%	100K/1V	9	5	38	33
ACDMR0740T-6R8MT	6.8±20%	100K/1V	8.5	4.5	50	44
ACDMR0740T-8R2MT	8.2±20%	100K/1V	8	4.5	64	55
ACDMR0740T-100MT	10±20%	100K/1V	7	4	72	64

ACDMR0740T-150MT	15±20%	100K/1V	3.5	3	90	80
ACDMR0740T-220MT	22±20%	100K/1V	3.5	2.5	145	120
ACDMR0740T-330MT	33±20%	100K/1V	3.2	1.8	210	180
ACDMR0740T-470MT	47±20%	100K/1V	2.5	1.8	350	295

REMARK :

※1: Saturation Rated Current:DC current(A)that will cause Lo to drop approximately 30%

※2: Temperature Rise Current:DC current(A)that will cause an approximate △T of 40℃

※3: All test data is referenced to 25℃ ambient.Operating Temperature Range -40℃ to +125℃.

※4: The part temperature(ambient+temp rise)should not exceed 125℃ under worst case operating conditions. Circuit design,component placement,PWB trace size and thickness,airflow and other cooling provisions all affect the part temperature should be verified in the end application

ACDMR0750T SERIES

MECHANICAL DIMENSION :

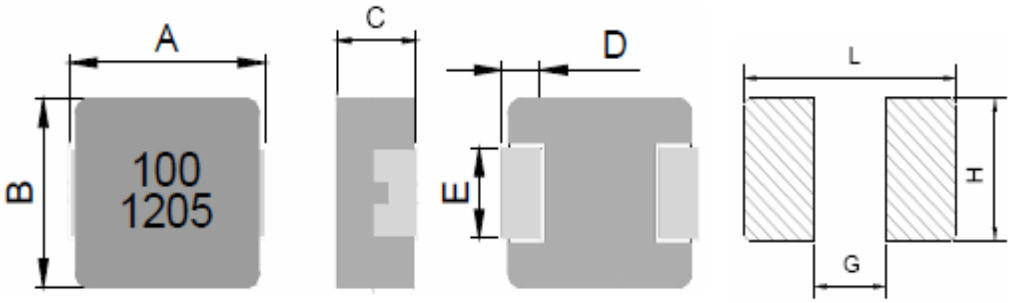

Series	A(mm)	B(mm)	C(mm)	D(mm)	E(mm)	L(mm)	G(mm)	H(mm)
ACDMR0750T	7.3±0.4	6.6±0.4	5.0 Max	1.8±0.3	3.0±0.3	8.4 Ref	2.5 Ref	3.5 Ref

ELECTRICAL CHARACTERISTICS: **RoHS**

Parts Number	Inductance (uH)	Test Freq. (Hz)	Isat(A) ※1	Irms(A) ※2	DCR (mΩ)	
			Typ	Typ	Max	Typ
ACDMR0750T-R22MT	0.22±20%	100K/1V	35	25	1.9	1.6
ACDMR0750T-R33MT	0.33±20%	100K/1V	32	25	3	2.5
ACDMR0750T-R40MT	0.4±20%	100K/1V	31	23	3.7	3.1
ACDMR0750T-R47MT	0.47±20%	100K/1V	30	22	3.9	3.5
ACDMR0750T-R56MT	0.56±20%	100K/1V	27	20	4.2	3.6
ACDMR0750T-R60MT	0.6±20%	100K/1V	25	19	4.3	3.8
ACDMR0750T-R68MT	0.68±20%	100K/1V	24	18	4.5	4
ACDMR0750T-R82MT	0.82±20%	100K/1V	22	16.5	4.9	4.6
ACDMR0750T-1R0MT	1.0±20%	100K/1V	20	15	6.5	6.1
ACDMR0750T-1R2MT	1.2±20%	100K/1V	18	14	7.5	6.7
ACDMR0750T-1R5MT	1.5±20%	100K/1V	16.5	12	9	8.6
ACDMR0750T-1R8MT	1.8±20%	100K/1V	15	12	11	9.5
ACDMR0750T-2R2MT	2.2±20%	100K/1V	14	10	12	11.2
ACDMR0750T-3R3MT	3.3±20%	100K/1V	12	8	20.9	19
ACDMR0750T-4R7MT	4.7±20%	100K/1V	10	6.5	30.8	28
ACDMR0750T-5R6MT	5.6±20%	100K/1V	9	6	49	43.5
ACDMR0750T-6R8MT	6.8±20%	100K/1V	8.5	5.5	51.5	46
ACDMR0750T-8R2MT	8.2±20%	100K/1V	8	5	63	56
ACDMR0750T-100MT	10±20%	100K/1V	7.5	4	69	60
ACDMR0750T-150MT	15±20%	100K/1V	6	3.5	92	81
ACDMR0750T-220MT	22±20%	100K/1V	5.5	2.5	170	140

REMARK :

※1: Saturation Rated Current:DC current(A)that will cause Lo to drop approximately 30%

※2: Temperature Rise Current:DC current(A)that will cause an approximate △T of 40℃

※3: All test data is referenced to 25℃ ambient.Operating Temperature Range -40℃ to +125℃.

※4: The part temperature(ambient+temp rise)should not exceed 125℃ under worst case operating conditions. Circuit design,component placement,PWB trace size and thickness,airflow and other cooling provisions all affect the part temperature should be verified in the end application

ACDMR1040M SERIES

MECHANICAL DIMENSION :

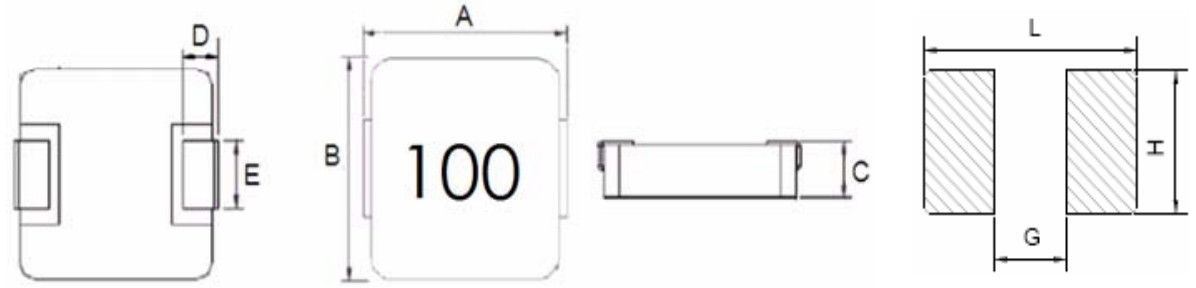

Series	A(mm)	B(mm)	C(mm)	D(mm)	E(mm)	L(mm)	G(mm)	H(mm)
ACDMR1040M	11.5 Max	10±0.4	4.0 Max	2.0±0.5	3.0±0.5	13.6 Ref	5.4 Ref	4.1 Ref

ELECTRICAL CHARACTERISTICS: **RoHS**

Parts Number	Inductance (uH)	Test Freq. (Hz)	Isat(A) ※1	Irms(A) ※2	DCR (mΩ)	
			Typ	Typ	Max	Typ
ACDMR1040M-R15MT	0.15±20%	100K/1V	75	45	0.65	0.5
ACDMR1040M-R22MT	0.22±20%	100K/1V	60	35	1	0.9
ACDMR1040M-R30MT	0.3±20%	100K/1V	50	35	1.1	0.95
ACDMR1040M-R36MT	0.36±20%	100K/1V	50	30	1.2	1.05
ACDMR1040M-R47MT	0.47±20%	100K/1V	40	30	1.7	1.5
ACDMR1040M-R56MT	0.56±20%	100K/1V	33	25	1.8	1.6
ACDMR1040M-R68MT	0.68±20%	100K/1V	30	23	2.4	2.1
ACDMR1040M-R80MT	0.8±20%	100K/1V	29	23	2.7	2.6
ACDMR1040M-1R0MT	1.0±20%	100K/1V	28	19	3.3	3
ACDMR1040M-1R5MT	1.5±20%	100K/1V	26	16	4.2	3.8
ACDMR1040M-2R2MT	2.2±20%	100K/1V	18	12	7	6
ACDMR1040M-3R3MT	3.3±20%	100K/1V	16	11	11.8	10
ACDMR1040M-4R7MT	4.7±20%	100K/1V	15	9	20	17
ACDMR1040M-6R8MT	6.8±20%	100K/1V	12	8.5	25	22
ACDMR1040M-8R2MT	8.2±20%	100K/1V	9	8	27	25
ACDMR1040M-100MT	10±20%	100K/1V	8.5	7.8	30	27
ACDMR1040M-150MT	15±20%	100K/1V	7	6.5	45	40
ACDMR1040M-220MT	22±20%	100K/1V	5.5	5	66	58
ACDMR1040M-330MT	33±20%	100K/1V	5	4.4	92	85
ACDMR1040M-470MT	47±20%	100K/1V	3.5	3.3	145	130
ACDMR1040M-680MT	68±20%	100K/1V	3	2.5	195	178
ACDMR1040M-101MT	100±20%	100K/1V	2.3	2.2	350	315

REMARK :

※1: Saturation Rated Current:DC current(A)that will cause Lo to drop approximately 30%

※2: Temperature Rise Current:DC current(A)that will cause an approximate △T of 40℃

※3: All test data is referenced to 25℃ ambient.Operating Temperature Range -55℃ to +125℃.

※4: The part temperature(ambient+temp rise)should not exceed 125℃ under worst case operating conditions. Circuit design,component placement,PWB trace size and thickness,airflow and other cooling provisions all affect the part temperature should be verified in the end application

ACDMR1040T SERIES

MECHANICAL DIMENSION :

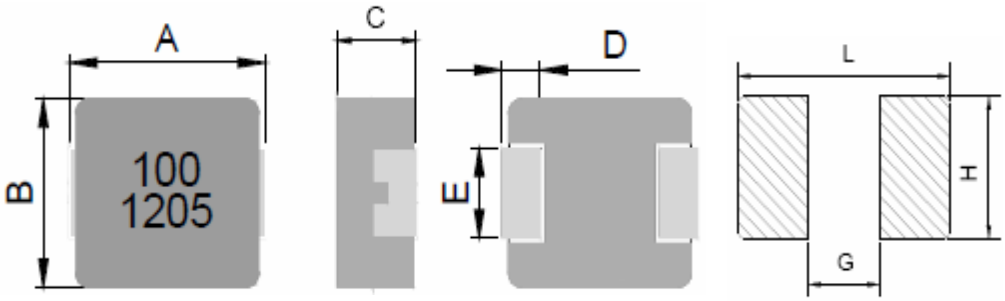

Series	A(mm)	B(mm)	C(mm)	D(mm)	E(mm)	L(mm)	G(mm)	H(mm)
ACDMR1040T	11.0±0.6	10±0.4	4.0 Max	2.3±0.3	3.0±0.3	13.6 Ref	5.4 Ref	3.5 Ref

ELECTRICAL CHARACTERISTICS: **RoHS**

Parts Number	Inductance (uH)	Test Freq. (Hz)	Isat(A) ※1	Irms(A) ※2	DCR (mΩ)	
			Typ	Typ	Max	Typ
ACDMR1040T-R15YT	0.15±30%	100K/1V	75	43	0.6	0.5
ACDMR1040T-R22MT	0.22±20%	100K/1V	60	35	1.0	0.8
ACDMR1040T-R27MT	0.27±20%	100K/1V	60	33	1.0	0.82
ACDMR1040T-R36MT	0.36±20%	100K/1V	60	31	1.2	1.05
ACDMR1040T-R39MT	0.39±20%	100K/1V	60	30	1.3	1.1
ACDMR1040T-R45MT	0.45±20%	100K/1V	45	29	1.5	1.3
ACDMR1040T-R47MT	0.47±20%	100K/1V	43	28	1.5	1.3
ACDMR1040T-R56MT	0.56±20%	100K/1V	40	25	1.8	1.6
ACDMR1040T-R68MT	0.68±20%	100K/1V	39	22	2.7	2.4
ACDMR1040T-1R0MT	1.0±20%	100K/1V	36	18	3.3	3.0
ACDMR1040T-1R5MT	1.5±20%	100K/1V	33	16	4.6	4.0
ACDMR1040T-2R2MT	2.2±20%	100K/1V	27	12	7.0	6.5
ACDMR1040T-3R3MT	3.3±20%	100K/1V	20	11	11.8	10.8
ACDMR1040T-4R7MT	4.7±20%	100K/1V	17	10	15.5	15
ACDMR1040T-5R6MT	5.6±20%	100K/1V	14	9.0	19.3	17
ACDMR1040T-6R8MT	6.8±20%	100K/1V	13.5	8.5	23.3	17.5
ACDMR1040T-8R2MT	8.2±20%	100K/1V	12.5	8.0	22.5	20
ACDMR1040T-100MT	10±20%	100K/1V	12	7.5	30	27
ACDMR1040T-150MT	15±20%	100K/1V	10	6.25	45	40
ACDMR1040T-220MT	22±20%	100K/1V	7.0	5.0	74	64
ACDMR1040T-330MT	33±20%	100K/1V	5.0	3.5	112	92

REMARK :

※1: Saturation Rated Current:DC current(A)that will cause Lo to drop approximately 30%

※2: Temperature Rise Current:DC current(A)that will cause an approximate △T of 40℃

※3: All test data is referenced to 25℃ ambient.Operating Temperature Range -40℃ to +125℃.

※4: The part temperature(ambient+temp rise)should not exceed 125℃ under worst case operating conditions. Circuit design,component placement,PWB trace size and thickness,airflow and other cooling provisions all affect the part temperature should be verified in the end application

ACDMR1050T SERIES

MECHANICAL DIMENSION :

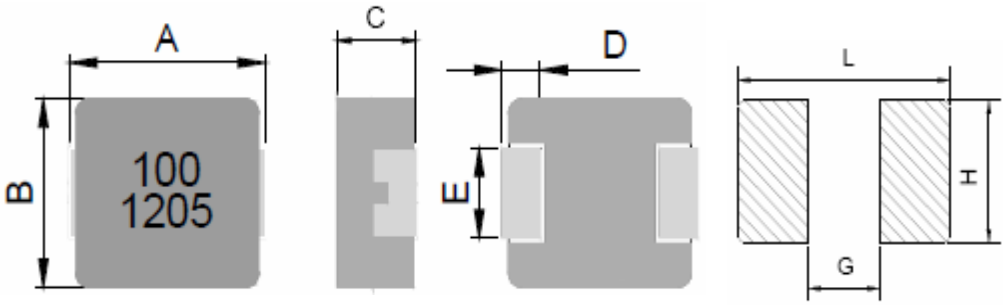

Series	A(mm)	B(mm)	C(mm)	D(mm)	E(mm)	L(mm)	G(mm)	H(mm)
ACDMR1050T	11.0±0.6	10±0.4	5.0 Max	2.3±0.3	3.0±0.3	13.6 Ref	5.4 Ref	3.5 Ref

ELECTRICAL CHARACTERISTICS: **RoHS**

Parts Number	Inductance (uH)	Test Freq. (Hz)	Isat(A) ※1	Irms(A) ※2	DCR (mΩ)	
			Typ	Typ	Max	Typ
ACDMR1050T-R30MT	0.3±20%	100K/1V	65	38	0.61	0.57
ACDMR1050T-R90MT	0.9±20%	100K/1V	32	25	3.0	2.2
ACDMR1050T-1R0MT	1.0±20%	100K/1V	30	22	3.5	2.8
ACDMR1050T-2R2MT	2.2±20%	100K/1V	24	16	6.0	5.4
ACDMR1050T-3R3MT	3.3±20%	100K/1V	22	14	10.4	9.0
ACDMR1050T-5R6MT	5.6±20%	100K/1V	16	10	16.8	14
ACDMR1050T-100MT	10±20%	100K/1V	13.5	8.0	29	25
ACDMR1050T-330MT	33±20%	100K/1V	7.5	4.3	92	80
ACDMR1050T-470MT	47±20%	100K/1V	6.5	3.8	145	125
ACDMR1050T-680MT	68±20%	100K/1V	4.0	2.5	205	176

REMARK :

※1: Saturation Rated Current:DC current(A)that will cause Lo to drop approximately 30%

※2: Temperature Rise Current:DC current(A)that will cause an approximate △T of 40℃

※3: All test data is referenced to 25℃ ambient.Operating Temperature Range -40℃ to +125℃.

※4: The part temperature(ambient+temp rise)should not exceed 125℃ under worst case operating conditions. Circuit design,component placement,PWB trace size and thickness,airflow and other cooling provisions all affect the part temperature should be verified in the end application

ACDMR1335T SERIES

MECHANICAL DIMENSION :

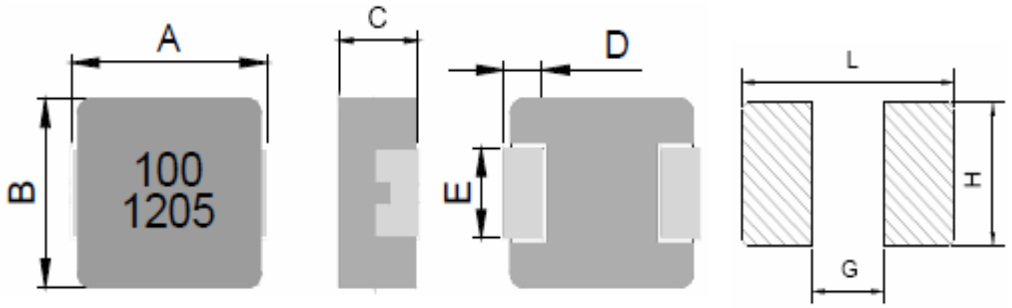

Series	A(mm)	B(mm)	C(mm)	D(mm)	E(mm)	L(mm)	G(mm)	H(mm)
ACDMR1335T	13.5±0.6	12.5±0.4	3.5 Max	2.3±0.3	①②	14.2 Ref	8.0 Ref	5.0 Ref

①4.0±0.3（0.56uH and below），②4.7±0.3（0.68uH and above）

ELECTRICAL CHARACTERISTICS: **RoHS**

Parts Number	Inductance (uH)	Test Freq. (Hz)	Isat(A) ※1	Irms(A) ※2	DCR (mΩ)	
			Typ	Typ	Max	Typ
ACDMR1335T-R10YT	0.1±30%	100K/1V	84	43	0.43	0.36
ACDMR1335T-R47MT	0.47±20%	100K/1V	55	32	1.8	1.2
ACDMR1335T-R68MT	0.68±20%	100K/1V	49	28	2.5	1.9
ACDMR1335T-1R0MT	1.0±20%	100K/1V	40	24	3.5	2.7
ACDMR1335T-2R2MT	2.2±20%	100K/1V	29	16	8	6.3
ACDMR1335T-3R3MT	3.3±20%	100K/1V	27	12	13.5	11
ACDMR1335T-4R7MT	4.7±20%	100K/1V	24	10	18.5	15.3
ACDMR1335T-5R6MT	5.6±20%	100K/1V	19	9.5	22	18
ACDMR1335T-6R8MT	6.8±20%	100K/1V	18	9.0	24	20
ACDMR1335T-8R2MT	8.2±20%	100K/1V	16	8.5	28	23
ACDMR1335T-100MT	10±20%	100K/1V	14	7.0	34	29

REMARK :

※1: Saturation Rated Current:DC current(A)that will cause Lo to drop approximately 30%

※2: Temperature Rise Current:DC current(A)that will cause an approximate △T of 40℃

※3: All test data is referenced to 25℃ ambient.Operating Temperature Range -40℃ to +125℃.

※4: The part temperature(ambient+temp rise)should not exceed 125℃ under worst case operating conditions. Circuit design,component placement,PWB trace size and thickness,airflow and other cooling provisions all affect the part temperature should be verified in the end application

ACDMR1350M SERIES

MECHANICAL DIMENSION :

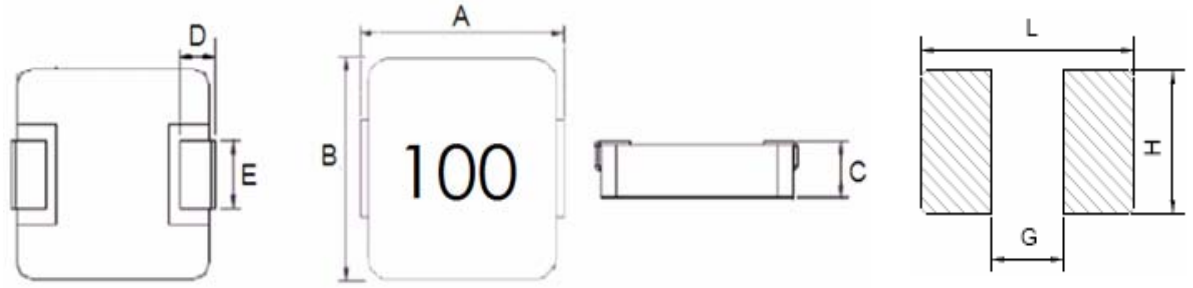

Series	A(mm)	B(mm)	C(mm)	D(mm)	E(mm)	L(mm)	G(mm)	H(mm)
ACDMR1350M	13.45±0.45	12.6±0.4	5.0 Max	2.0±0.5	3.85±0.5 5.0±0.5	14.5 Ref	8 Ref	5 Ref

* E: 3.85±0.5: ≤2.2uH, 5.0±0.5: ≥3.3uH

ELECTRICAL CHARACTERISTICS: **RoHS**

Parts Number	Inductance (uH)	Test Freq. (Hz)	Isat(A) ※1	Irms(A) ※2	DCR (mΩ)	
			Typ	Typ	Max	Typ
ACDMR1350M-R22MT	0.22±20%	100K/1V	75	50	0.7	0.5
ACDMR1350M-R36MT	0.36±20%	100K/1V	50	42	0.85	0.74
ACDMR1350M-R50MT	0.5±20%	100K/1V	48	38	1.15	1.1
ACDMR1350M-R68MT	0.68±20%	100K/1V	46	33	1.55	1.35
ACDMR1350M-R82MT	0.82±20%	100K/1V	39	30	1.67	1.45
ACDMR1350M-1R0MT	1.0±20%	100K/1V	35	26	2.2	1.9
ACDMR1350M-1R5MT	1.5±20%	100K/1V	33	23	3.2	2.8
ACDMR1350M-2R2MT	2.2±20%	100K/1V	24	15	5	4
ACDMR1350M-3R3MT	3.3±20%	100K/1V	22	14	7	5.9
ACDMR1350M-4R7MT	4.7±20%	100K/1V	21	13	9	8.2
ACDMR1350M-6R8MT	6.8±20%	100K/1V	16	12	18	14.5
ACDMR1350M-100MT	10±20%	100K/1V	12	9	22	19
ACDMR1350M-150MT	15±20%	100K/1V	10	8	30	23
ACDMR1350M-220MT	22±20%	100K/1V	6.5	4.5	58	51
ACDMR1350M-330MT	33±20%	100K/1V	6	3.5	84	75
ACDMR1350M-470MT	47±20%	100K/1V	5	3	130	116

REMARK :

※1: Saturation Rated Current:DC current(A)that will cause Lo to drop approximately 30%

※2: Temperature Rise Current:DC current(A)that will cause an approximate △T of 40℃

※3: All test data is referenced to 25℃ ambient.Operating Temperature Range -55℃ to +125℃.

※4: The part temperature(ambient+temp rise)should not exceed 125℃ under worst case operating conditions. Circuit design,component placement,PWB trace size and thickness,airflow and other cooling provisions all affect the part temperature should be verified in the end application

ACDMR1350T SERIES

MECHANICAL DIMENSION :

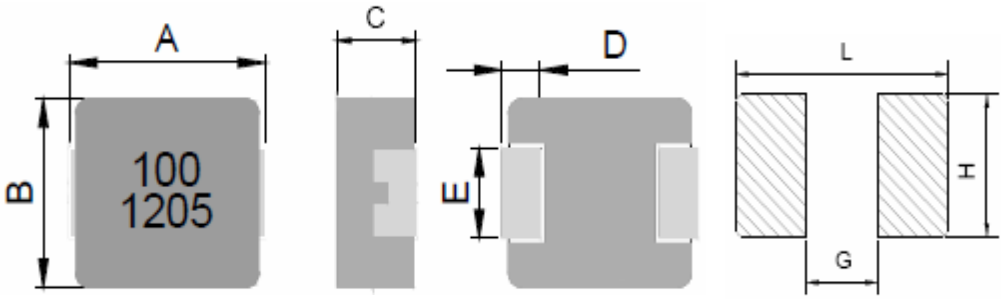

Series	A(mm)	B(mm)	C(mm)	D(mm)	E(mm)	L(mm)	G(mm)	H(mm)
ACDMR1350T	13.5±0.6	12.5±0.4	5.0 Max	2.3±0.3	①②	14.2 Ref	8.0 Ref	5.0 Ref

①4.0±0.3（0.56uH and below），②4.7±0.3（0.68uH and above）

ELECTRICAL CHARACTERISTICS: **RoHS**

Parts Number	Inductance (uH)	Test Freq. (Hz)	Isat(A) ※1	Irms(A) ※2	DCR (mΩ)	
			Typ	Typ	Max	Typ
ACDMR1350T-R20MT	0.2±20%	100K/1V	110	52	0.55	0.45
ACDMR1350T-R47MT	0.47±20%	100K/1V	65	38	1.1	0.86
ACDMR1350T-R68MT	0.68±20%	100K/1V	54	34	1.7	1.4
ACDMR1350T-1R0MT	1.0±20%	100K/1V	50	29	2.5	1.85
ACDMR1350T-2R2MT	2.2±20%	100K/1V	32	20	5.5	4.2
ACDMR1350T-3R3MT	3.3±20%	100K/1V	32	15	9.2	6.8
ACDMR1350T-4R7MT	4.7±20%	100K/1V	27	12	15	11.4
ACDMR1350T-6R8MT	6.8±20%	100K/1V	21	11	18.5	14.5
ACDMR1350T-8R2MT	8.2±20%	100K/1V	18	9.5	22.5	16.8
ACDMR1350T-100MT	10±20%	100K/1V	16	9.0	25.5	21.4
ACDMR1350T-220MT	22±20%	100K/1V	10	6.5	58	50

REMARK :

※1: Saturation Rated Current:DC current(A)that will cause Lo to drop approximately 30%

※2: Temperature Rise Current:DC current(A)that will cause an approximate △T of 40℃

※3: All test data is referenced to 25℃ ambient.Operating Temperature Range -40℃ to +125℃.

※4: The part temperature(ambient+temp rise)should not exceed 125℃ under worst case operating conditions. Circuit design,component placement,PWB trace size and thickness,airflow and other cooling provisions all affect the part temperature should be verified in the end application

ACDMR1360T SERIES

MECHANICAL DIMENSION :

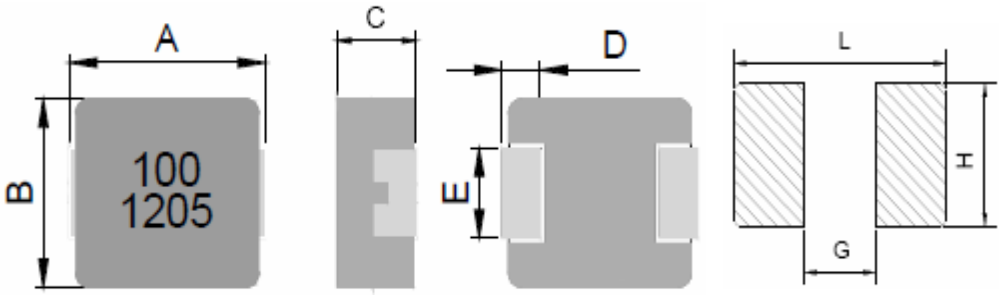

Series	A(mm)	B(mm)	C(mm)	D(mm)	E(mm)	L(mm)	G(mm)	H(mm)
ACDMR1360T	13.5±0.6	12.5±0.4	6.0 Max	2.3±0.3	4.7±0.3	14.2 Ref	8.0 Ref	5.0 Ref

ELECTRICAL CHARACTERISTICS: **RoHS**

Parts Number	Inductance (uH)	Test Freq. (Hz)	Isat(A) ※1	Irms(A) ※2	DCR (mΩ)	
			Typ	Typ	Max	Typ
ACDMR1360T-R47MT	0.47±20%	100K/1V	60	38	1.3	0.92
ACDMR1360T-R56MT	0.56±20%	100K/1V	56	35	1.5	1.15
ACDMR1360T-R68MT	0.68±20%	100K/1V	53	33	1.7	1.33
ACDMR1360T-1R0MT	1.0±20%	100K/1V	45	29	2.4	1.8
ACDMR1360T-1R2MT	1.2±20%	100K/1V	44	28	2.8	2.1
ACDMR1360T-1R5MT	1.5±20%	100K/1V	43	26	3.2	2.7
ACDMR1360T-1R9MT	1.9±20%	100K/1V	36	22	4.3	3.7
ACDMR1360T-2R2MT	2.2±20%	100K/1V	34	21	4.7	4.0
ACDMR1360T-2R7MT	2.7±20%	100K/1V	31	19	5.4	4.6
ACDMR1360T-3R3MT	3.3±20%	100K/1V	28	17	7.1	5.8
ACDMR1360T-4R7MT	4.7±20%	100K/1V	25	16	11.5	9.5
ACDMR1360T-5R6MT	5.6±20%	100K/1V	22	15.5	12.6	10.8
ACDMR1360T-6R8MT	6.8±20%	100K/1V	19	15	13.8	12
ACDMR1360T-8R2MT	8.2±20%	100K/1V	17	11	16	13.6
ACDMR1360T-100MT	10±20%	100K/1V	15.5	11	20.7	18
ACDMR1360T-120MT	12±20%	100K/1V	13.5	9.5	23	20
ACDMR1360T-150MT	15±20%	100K/1V	13	9.0	29	25
ACDMR1360T-180MT	18±20%	100K/1V	12	8.5	35	30

ACDMR1360T SERIES

ACDMR1360T-220MT	22±20%	100K/1V	11	8.0	39.5	34
ACDMR1360T-270MT	27±20%	100K/1V	9.0	7.0	56	49
ACDMR1360T-330MT	33±20%	100K/1V	8.0	6.0	75	65
ACDMR1360T-470MT	47±20%	100K/1V	7.0	5.5	90	80
ACDMR1360T-560MT	56±20%	100K/1V	6.5	5.3	118	101
ACDMR1360T-680MT	68±20%	100K/1V	6.0	5.0	140	120
ACDMR1360T-820MT	82±20%	100K/1V	5.5	4.5	161	138
ACDMR1360T-101MT	100±20%	100K/1V	5.0	4.0	200	180
ACDMR1360T-121MT	120±20%	100K/1V	4.5	3.5	235	210
ACDMR1360T-151MT	150±20%	100K/1V	4.0	3.0	350	300
ACDMR1360T-221MT	220±20%	100K/1V	3.0	2.0	550	480

REMARK :

※1: Saturation Rated Current:DC current(A)that will cause Lo to drop approximately 30%

※2: Temperature Rise Current:DC current(A)that will cause an approximate △T of 40℃

※3: All test data is referenced to 25℃ ambient.Operating Temperature Range -40℃ to +125℃.

※4: The part temperature(ambient+temp rise)should not exceed 125℃ under worst case operating conditions. Circuit design,component placement,PWB trace size and thickness,airflow and other cooling provisions all affect the part temperature should be verified in the end application

ACDMR1360W SERIES

MECHANICAL DIMENSION :

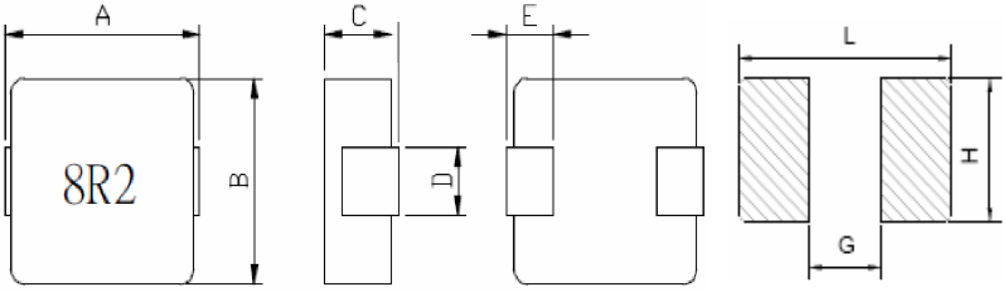

Series	A(mm)	B(mm)	C(mm)	D(mm)	E(mm)	L(mm)	G(mm)	H(mm)
ACDMR1360W	13.2±1.1	12.8±0.6	6.0 Max	3.8±0.3	2.5±0.5	14.4 Ref	5.2 Ref	5.0 Ref

ELECTRICAL CHARACTERISTICS: **RoHS**

Parts Number	Inductance (uH)	Test Freq. (Hz)	Isat(A) ※1	Irms(A) ※2	DCR (mΩ)
			Typ	Typ	Max
ACDMR1360W-4R7MT	4.7±20%	100K/1V	18	12	9
ACDMR1360W-8R2MT	8.2±20%	100K/1V	15	9	13

REMARK :

※1: Saturation Rated Current:DC current(A)that will cause Lo to drop approximately 30%

※2: Temperature Rise Current:DC current(A)that will cause an approximate △T of 40℃

※3: All test data is referenced to 25℃ ambient.Operating Temperature Range -55℃ to +125℃.

※4: The part temperature(ambient+temp rise)should not exceed 125℃ under worst case operating conditions. Circuit design,component placement,PWB trace size and thickness,airflow and other cooling provisions all affect the part temperature should be verified in the end application

ACDMR1360YW SERIES

MECHANICAL DIMENSION :

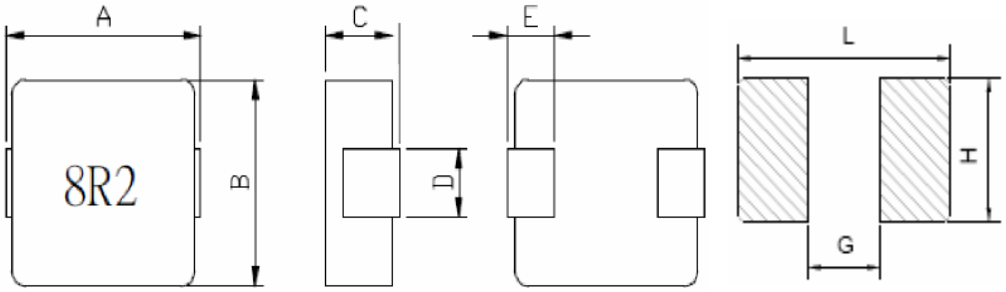

Series	A(mm)	B(mm)	C(mm)	D(mm)	E(mm)	L(mm)	G(mm)	H(mm)
ACDMR1360YW	13.2±1.1	12.8±0.6	6.0 Max	3.8±0.3	2.5±0.5	14.4 Ref	5.2 Ref	5.0 Ref

ELECTRICAL CHARACTERISTICS: **RoHS**

Parts Number	Inductance (uH)	Test Freq. (Hz)	Isat(A) ※1	Irms(A) ※2	DCR (mΩ)
			Typ	Typ	Max
ACDMR1360YW-8R2MT	8.2±20%	100K/1V	13	11	16
ACDMR1360YW-100MT	10±20%	100K/1V	12	7.1	15

REMARK :

※1: Saturation Rated Current:DC current(A)that will cause Lo to drop approximately 30%

※2: Temperature Rise Current:DC current(A)that will cause an approximate △T of 40℃

※3: All test data is referenced to 25℃ ambient.Operating Temperature Range -55℃ to +125℃.

※4: The part temperature(ambient+temp rise)should not exceed 125℃ under worst case operating conditions. Circuit design,component placement,PWB trace size and thickness,airflow and other cooling provisions all affect the part temperature should be verified in the end application

ACDMR1365T SERIES

MECHANICAL DIMENSION :

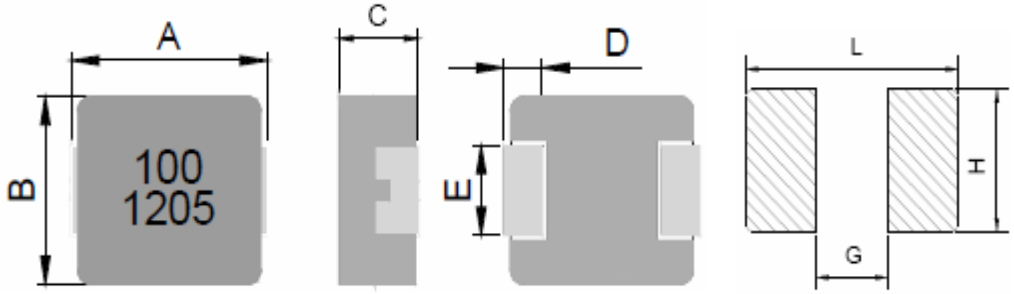

Series	A(mm)	B(mm)	C(mm)	D(mm)	E(mm)	L(mm)	G(mm)	H(mm)
ACDMR1365T	13.5±0.6	12.5±0.4	6.5 Max	2.3±0.3	4.7±0.3	14.2 Ref	8.0 Ref	5.0 Ref

ELECTRICAL CHARACTERISTICS: **RoHS**

Parts Number	Inductance (uH)	Test Freq. (Hz)	Isat(A) ※1	Irms(A) ※2	DCR (mΩ)	
			Typ	Typ	Max	Typ
ACDMR1365T-R15MT	0.15±20%	100K/1V	118	55	0.6	0.49
ACDMR1365T-R22MT	0.22±20%	100K/1V	112	53	0.6	0.47
ACDMR1365T-R30MT	0.3±20%	100K/1V	72	48	0.72	0.6
ACDMR1365T-R33MT	0.33±20%	100K/1V	68	46	0.8	0.65
ACDMR1365T-R36MT	0.36±20%	100K/1V	66	45	0.9	0.7
ACDMR1365T-R40MT	0.4±20%	100K/1V	64	44	1.0	0.7
ACDMR1365T-R47MT	0.47±20%	100K/1V	63	41	1.2	0.9
ACDMR1365T-R50MT	0.5±20%	100K/1V	60	40	1.25	0.92
ACDMR1365T-R56MT	0.56±20%	100K/1V	58	37	1.2	1.05
ACDMR1365T-R68MT	0.68±20%	100K/1V	55	35	1.5	1.25
ACDMR1365T-R82MT	0.82±20%	100K/1V	50	33	1.9	1.5
ACDMR1365T-1R0MT	1.0±20%	100K/1V	48	30	2.3	1.7
ACDMR1365T-1R5MT	1.5±20%	100K/1V	45	27	3.0	2.5
ACDMR1365T-2R2MT	2.2±20%	100K/1V	37	22	4.2	3.8
ACDMR1365T-3R3MT	3.3±20%	100K/1V	30	18	6.8	5.7
ACDMR1365T-4R7MT	4.7±20%	100K/1V	28	13.5	8.4	7.0
ACDMR1365T-5R6MT	5.6±20%	100K/1V	23	12.5	10	8.5
ACDMR1365T-6R8MT	6.8±20%	100K/1V	18	11.5	11.5	9.5

ACDMR1365T SERIES

ACDMR1365T-8R2MT	8.2±20%	100K/1V	16	10.5	11.5	12
ACDMR1365T-100MT	10±20%	100K/1V	15.5	10	16.5	13.2
ACDMR1365T-130MT	13±20%	100K/1V	13	9.0	24	21
ACDMR1365T-150MT	15±20%	100K/1V	12.5	9.0	28	23.2
ACDMR1365T-220MT	22±20%	100K/1V	12	9.0	37	32.5
ACDMR1365T-330MT	33±20%	100K/1V	11	8.0	58	48
ACDMR1365T-470MT	47±20%	100K/1V	9.5	6.5	90	76

REMARK :

※1: Saturation Rated Current:DC current(A)that will cause Lo to drop approximately 30%

※2: Temperature Rise Current:DC current(A)that will cause an approximate △T of 40℃

※3: All test data is referenced to 25℃ ambient.Operating Temperature Range -40℃ to +125℃.

※4: The part temperature(ambient+temp rise)should not exceed 125℃ under worst case operating conditions. Circuit design,component placement,PWB trace size and thickness,airflow and other cooling provisions all affect the part temperature should be verified in the end application

ACDMR1365TW SERIES

MECHANICAL DIMENSION :

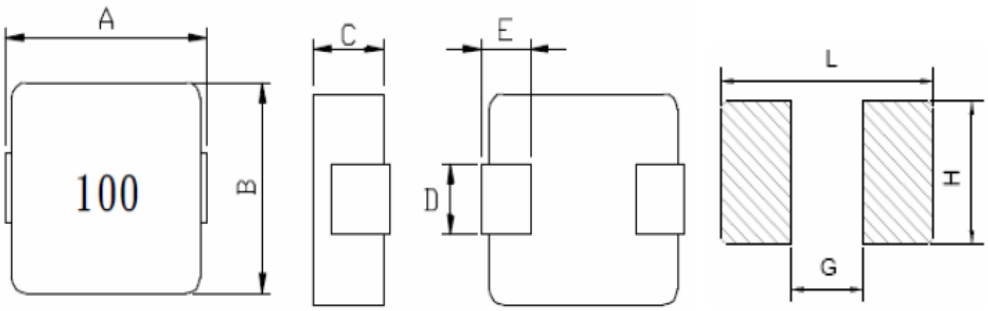

Series	A(mm)	B(mm)	C(mm)	D(mm)	E(mm)	L(mm)	G(mm)	H(mm)
ACDMR1365TW	13.2±1.1	12.8±0.6	6.5 Max	3.8±0.3	2.5±0.5	13.6 Ref	7.2 Ref	6.0 Ref

ELECTRICAL CHARACTERISTICS: **RoHS**

Parts Number	Inductance (uH)	Test Freq. (Hz)	Isat(A) ※1	Irms(A) ※2	DCR (mΩ)
			Typ	Typ	Max
ACDMR1365TW-100MT	10±20%	100K/1V	18	10	13.2

REMARK :

※1: Saturation Rated Current:DC current(A)that will cause Lo to drop approximately 30%

※2: Temperature Rise Current:DC current(A)that will cause an approximate △T of 40℃

※3: All test data is referenced to 25℃ ambient.Operating Temperature Range -55℃ to +125℃.

※4: The part temperature(ambient+temp rise)should not exceed 125℃ under worst case operating conditions. Circuit design,component placement,PWB trace size and thickness,airflow and other cooling provisions all affect the part temperature should be verified in the end application

ACDMR1365W SERIES

MECHANICAL DIMENSION :

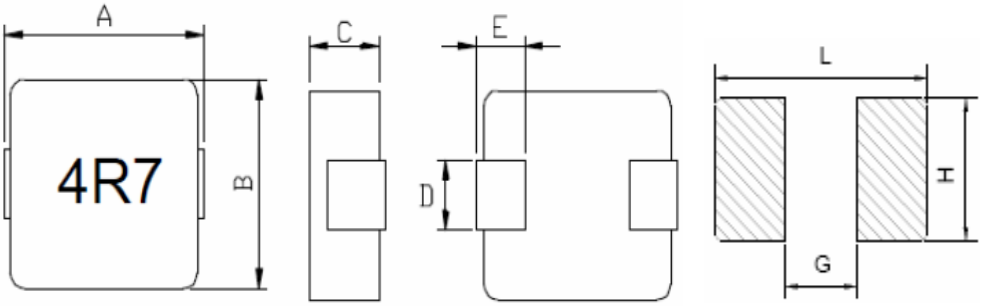

Series	A(mm)	B(mm)	C(mm)	D(mm)	E(mm)	L(mm)	G(mm)	H(mm)
ACDMR1365W	13.2±1.1	12.8±0.6	6.5 Max	3.8±0.3	2.5±0.5	13.6 Ref	7.2 Ref	6.0 Ref

ELECTRICAL CHARACTERISTICS: **RoHS**

Parts Number	Inductance (uH)	Test Freq. (Hz)	Isat(A) ※1	Irms(A) ※2	DCR (mΩ)
			Typ	Typ	Max
ACDMR1365W-4R7MT	4.7±20%	100K/1V	24	15	9.0
ACDMR1365W-100MT	10±20%	100K/1V	15	10	14
ACDMR1365W-470MT	47±20%	100K/1V	6.0	4.0	65
ACDMR1365W-680MT	68±20%	100K/1V	5.5	3.5	115

REMARK :

※1: Saturation Rated Current:DC current(A)that will cause Lo to drop approximately 30%

※2: Temperature Rise Current:DC current(A)that will cause an approximate △T of 40℃

※3: All test data is referenced to 25℃ ambient.Operating Temperature Range -55℃ to +125℃.

※4: The part temperature(ambient+temp rise)should not exceed 125℃ under worst case operating conditions. Circuit design,component placement,PWB trace size and thickness,airflow and other cooling provisions all affect the part temperature should be verified in the end application

ACDMR1770M SERIES

MECHANICAL DIMENSION :

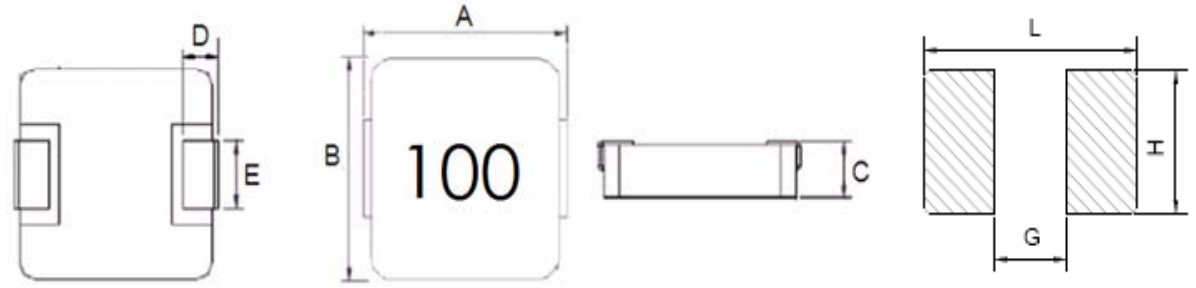

Series	A(mm)	B(mm)	C(mm)	D(mm)	E(mm)	L(mm)	G(mm)	H(mm)
ACDMR1770M	17.15±0.4	17.15 Max	7.0 Max	2.11±0.3	11.94±0.3	20.07 Ref	12.42 Ref	12.32 Ref

ELECTRICAL CHARACTERISTICS: **RoHS**

Parts Number	Inductance (uH)	Test Freq. (Hz)	Isat(A) ※1	Irms(A) ※2	DCR (mΩ)	
			Typ	Typ	Max	Typ
ACDMR1770M-1R0MT	1.0±20%	100K/1V	62	42	1.5	1.3
ACDMR1770M-2R2MT	2.2±20%	100K/1V	34	29	2.5	2.15
ACDMR1770M-3R3MT	3.3±20%	100K/1V	27	24.5	2.93	2.79
ACDMR1770M-4R7MT	4.7±20%	100K/1V	24	16	4.72	4.12
ACDMR1770M-6R8MT	6.8±20%	100K/1V	22	14	7.55	6.55
ACDMR1770M-8R2MT	8.2±20%	100K/1V	20	12.5	8.7	8.1
ACDMR1770M-100MT	10±20%	100K/1V	18	11	10	9.3
ACDMR1770M-150MT	15±20%	100K/1V	14.5	10	17.5	16.5
ACDMR1770M-200MT	20±20%	100K/1V	12	9.5	21.9	19.5
ACDMR1770M-220MT	22±20%	100K/1V	11	8	23	20.5
ACDMR1770M-330MT	33±20%	100K/1V	10	7	37	35.1
ACDMR1770M-470MT	47±20%	100K/1V	7.5	6	47	41
ACDMR1770M-680MT	68±20%	100K/1V	6.5	5.5	85	74
ACDMR1770M-101MT	100±20%	100K/1V	4.5	4	130	120

REMARK :

※1: Saturation Rated Current:DC current(A)that will cause Lo to drop approximately 30%

※2: Temperature Rise Current:DC current(A)that will cause an approximate △T of 40℃

※3: All test data is referenced to 25℃ ambient.Operating Temperature Range -55℃ to +125℃.

※4: The part temperature(ambient+temp rise)should not exceed 125℃ under worst case operating conditions. Circuit design,component placement,PWB trace size and thickness,airflow and other cooling provisions all affect the part temperature should be verified in the end application

ACDMR1770T SERIES

MECHANICAL DIMENSION :

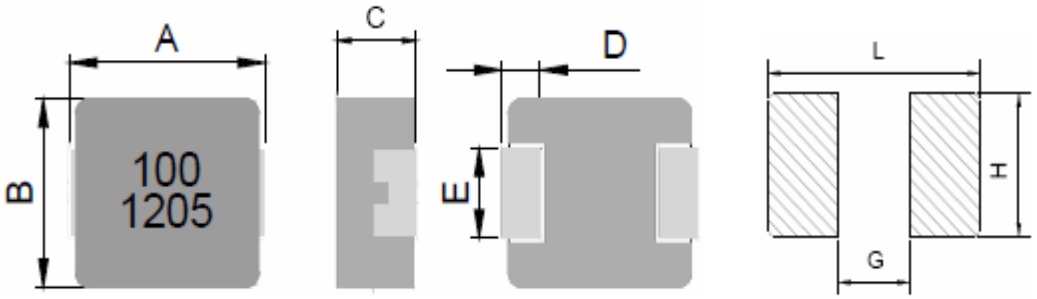

Series	A(mm)	B(mm)	C(mm)	D(mm)	E(mm)	L(mm)	G(mm)	H(mm)
ACDMR1770T	18.1 Max	16.9±0.4	7.0 Max	2.1±0.3	11.9±0.3	18.5 Ref	12.2 Ref	12.5 Ref

ELECTRICAL CHARACTERISTICS: **RoHS**

Parts Number	Inductance (uH)	Test Freq. (Hz)	Isat(A) ※1	Irms(A) ※2	DCR (mΩ)	
			Typ	Typ	Max	Typ
ACDMR1770T-R45MT	0.45±20%	100K/1V	85	62	0.96	0.8
ACDMR1770T-1R0MT	1.0±20%	100K/1V	60	52	2.0	1.6
ACDMR1770T-1R5MT	1.5±20%	100K/1V	52	47	2.5	2.0
ACDMR1770T-2R2MT	2.2±20%	100K/1V	47	43.5	2.7	2.4
ACDMR1770T-3R3MT	3.3±20%	100K/1V	45	28	3.9	3.5
ACDMR1770T-4R7MT	4.7±20%	100K/1V	41	25	5.5	4.8
ACDMR1770T-5R6MT	5.6±20%	100K/1V	40	21	7.05	5.8
ACDMR1770T-6R8MT	6.8±20%	100K/1V	32	19	9.2	8.4
ACDMR1770T-8R2MT	8.2±20%	100K/1V	25	18	10.8	9.6
ACDMR1770T-100MT	10±20%	100K/1V	24	16.5	13	11.8
ACDMR1770T-150MT	15±20%	100K/1V	23	12.5	20.5	17.8
ACDMR1770T-220MT	22±20%	100K/1V	18	12	26.5	25.1
ACDMR1770T-330MT	33±20%	100K/1V	15	10.7	44	38
ACDMR1770T-390MT	39±20%	100K/1V	11	9.2	48	40
ACDMR1770T-470MT	47±20%	100K/1V	9.5	8.7	55	48
ACDMR1770T-560MT	56±20%	100K/1V	9.0	7.8	62	54
ACDMR1770T-680MT	68±20%	100K/1V	8.0	7.0	80	68
ACDMR1770T-820MT	82±20%	100K/1V	7.0	5.7	100	87
ACDMR1770T-101MT	100±20%	100K/1V	6.5	5.3	118	102

REMARK :

※1: Saturation Rated Current:DC current(A)that will cause Lo to drop approximately 30%

※2: Temperature Rise Current:DC current(A)that will cause an approximate △T of 40℃

※3: All test data is referenced to 25℃ ambient.Operating Temperature Range -40℃ to +125℃.

※4: The part temperature(ambient+temp rise)should not exceed 125℃ under worst case operating conditions. Circuit design,component placement,PWB trace size and thickness,airflow and other cooling provisions all affect the part temperature should be verified in the end application

ACDMR1770AT SERIES

MECHANICAL DIMENSION :

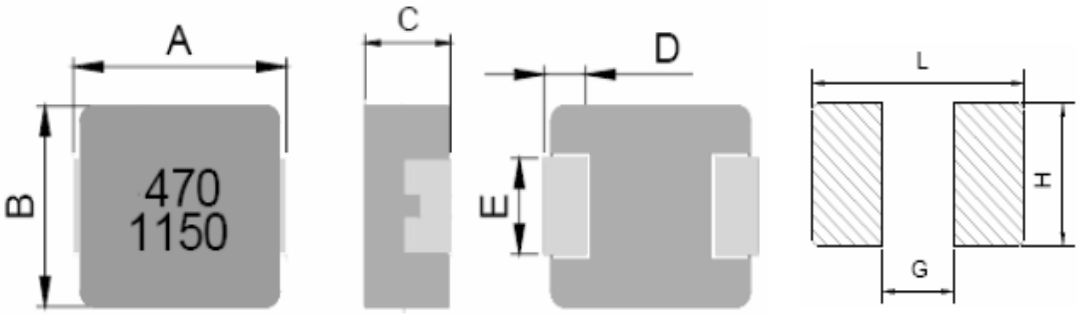

Series	A(mm)	B(mm)	C(mm)	D(mm)	E(mm)	L(mm)	G(mm)	H(mm)
ACDMR1770AT	18.1 Max	16.9±0.4	7.0 Max	2.1±0.3	11.9±0.3	18.5 Ref	12.2 Ref	12.5 Ref

ELECTRICAL CHARACTERISTICS: **RoHS**

Parts Number	Inductance (uH)	Test Freq. (Hz)	Isat(A) ※1	Irms(A) ※2	DCR (mΩ)	
			Typ	Typ	Max	Typ
ACDMR1770AT-470MT	47±20%	100K/1V	13	8.5	54	45

REMARK :

※1: Saturation Rated Current:DC current(A)that will cause Lo to drop approximately 30%

※2: Temperature Rise Current:DC current(A)that will cause an approximate △T of 40℃

※3: All test data is referenced to 25℃ ambient.Operating Temperature Range -40℃ to +125℃.

※4: The part temperature(ambient+temp rise)should not exceed 125℃ under worst case operating conditions. Circuit design,component placement,PWB trace size and thickness,airflow and other cooling provisions all affect the part temperature should be verified in the end application

ACDMR1770W SERIES

MECHANICAL DIMENSION :

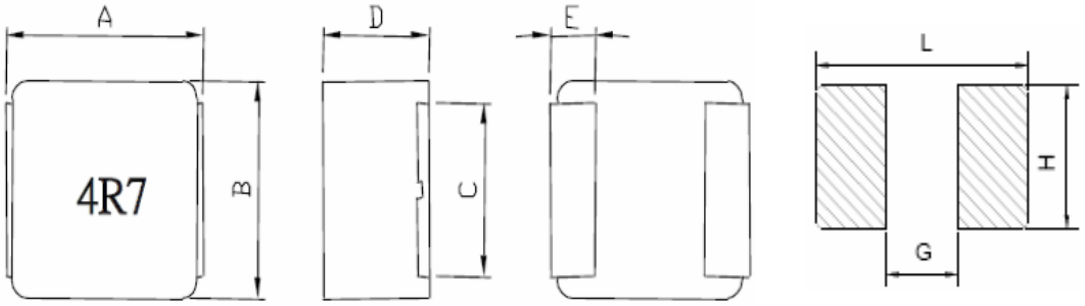

Series	A(mm)	B(mm)	C(mm)	D(mm)	E(mm)	L(mm)	G(mm)	H(mm)
ACDMR1770W	17.5±1.1	17.25 Max	7.0 Max	11.94±0.3	2.5±0.5	18.4 Ref	9.2 Ref	13 Ref

ELECTRICAL CHARACTERISTICS: **RoHS**

Parts Number	Inductance (uH)	Test Freq. (Hz)	Isat(A) ※1	Irms(A) ※2	DCR (mΩ)
			Typ	Typ	Max
ACDMR1770W-4R7MT	4.7±20%	100K/1V	26	16	4.7
ACDMR1770W-6R8MT	6.8±20%	100K/1V	23	13	6.9
ACDMR1770W-220MT	22±20%	100K/1V	15	9.0	25.5
ACDMR1770W-470MT	47±20%	100K/1V	8.0	5.0	47
ACDMR1770W-101MT	100±20%	100K/1V	7.0	4.0	115

REMARK :

※1: Saturation Rated Current:DC current(A)that will cause Lo to drop approximately 30%

※2: Temperature Rise Current:DC current(A)that will cause an approximate △T of 40℃

※3: All test data is referenced to 25℃ ambient.Operating Temperature Range -55℃ to +125℃.

※4: The part temperature(ambient+temp rise)should not exceed 125℃ under worst case operating conditions. Circuit design,component placement,PWB trace size and thickness,airflow and other cooling provisions all affect the part temperature should be verified in the end application

ACDMR1770TW SERIES

MECHANICAL DIMENSION :

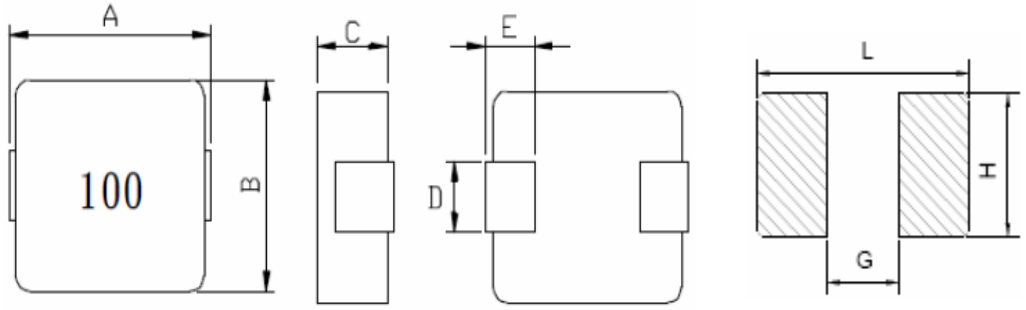

Series	A(mm)	B(mm)	C(mm)	D(mm)	E(mm)	L(mm)	G(mm)	H(mm)
ACDMR1770TW	17.5±1.1	17.25 Max	7.0 Max	11.94±0.3	2.5±0.5	14.2 Ref	5.0 Ref	3.8 Ref

ELECTRICAL CHARACTERISTICS: **RoHS**

Parts Number	Inductance (uH)	Test Freq. (Hz)	Isat(A) ※1	Irms(A) ※2	DCR (mΩ)
			Typ	Typ	Max
ACDMR1770TW-100MT	10±20%	100K/1V	29	16.5	13

REMARK :

※1: Saturation Rated Current:DC current(A)that will cause Lo to drop approximately 30%

※2: Temperature Rise Current:DC current(A)that will cause an approximate △T of 40℃

※3: All test data is referenced to 25℃ ambient.Operating Temperature Range -55℃ to +125℃.

※4: The part temperature(ambient+temp rise)should not exceed 125℃ under worst case operating conditions. Circuit design,component placement,PWB trace size and thickness,airflow and other cooling provisions all affect the part temperature should be verified in the end application